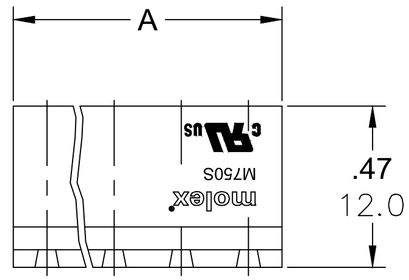

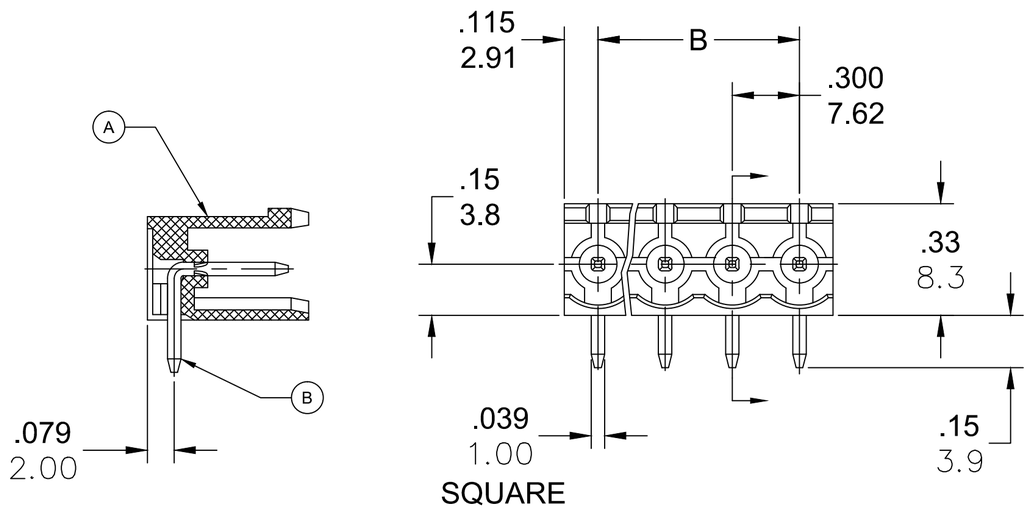

PART NUMBER DATA

CIRCUITS	PART NUMBER	ENGINEERING NUMBER	COLOR	A IN	mm	B IN	mm
2	397300002	M750S-06-5-02-3	GREEN	.53	13.4	.300	7.62
3	397300003	M750S-06-5-03-3	GREEN	.83	21.1	.600	15.24
4	397300004	M750S-06-5-04-3	GREEN	1.13	28.7	.900	22.86
5	397300005	M750S-06-5-05-3	GREEN	1.43	36.3	1.200	30.48
6	397300006	M750S-06-5-06-3	GREEN	1.73	43.9	1.500	38.10
7	397300007	M750S-06-5-07-3	GREEN	2.03	51.5	1.800	45.72
8	397300008	M750S-06-5-08-3	GREEN	2.33	59.2	2.100	53.34
9	397300009	M750S-06-5-09-3	GREEN	2.63	66.8	2.400	60.96
10	397300010	M750S-06-5-10-3	GREEN	2.93	74.4	2.700	68.58
11	397300011	M750S-06-5-11-3	GREEN	3.23	82.0	3.000	76.20
12	397300012	M750S-06-5-12-3	GREEN	3.53	89.6	3.300	83.82

REF. LAST 2 DIGITS OF PART NUMBER EQUALS NUMBER OF POLES

ENGINEERING NUMBER LEGEND

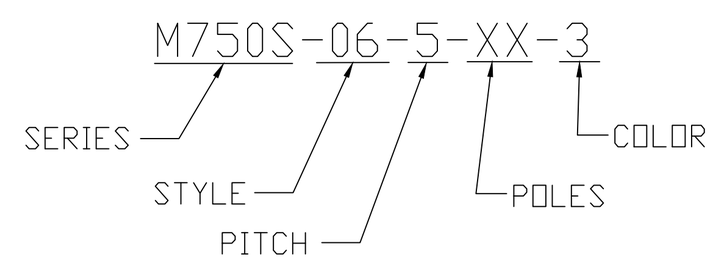

CONTACT FACTORY FOR OPTIONAL COLORS

PCB LAYOUT

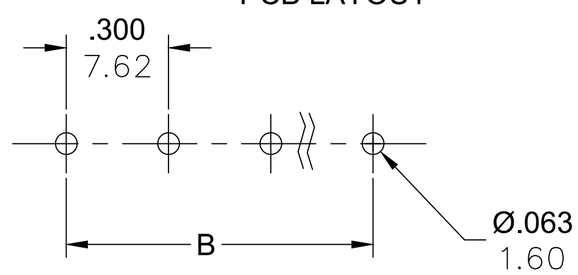

SPECIFICATIONS:

1. MATERIAL:
   A. BODY: PA66, UL94 V-0
   B. TERMINAL: BRASS, TIN PLATED
2. RATING: 15A AT 51-150V, 10A AT 151-300V
3. OPERATING TEMPERATURE: -40°C + 105°C
4. DIELECTRIC VOLTAGE WITHSTAND: AC 2500V FOR 1 MINUTE
5. INSULATION RESISTANCE: DC 500V, 500MΩ.
6. RATED IMPULSE VOLTAGE: 4000V, PLUS AND MINUS 5 TIMES EACH
7. MAX SOLDERING TEMP: 260°C (500°F) FOR 5 SECONDS
8. DIMS SHOWN ARE FOR REFERENCE ONLY

TOLERANCES			
MM	TOL	INCH	TOL
0-6	±0.25	0-.24	±.010
>6-30	±0.40	.24-1.18	±.016
>30-120	±0.50	1.18-4.76	±.020
>120	±0.80	>4.76	±.031

REV	DESCRIPTION
EC NO: IPG2017-0881	REVISED DOC TOL
DRWN: ABENJAMI	4/6/17
CH'KD: ---	---
APPR: BRUPERT	2014/10/16

A1

QUALITY SYMBOL: ▼=0, (C)=0

GENERAL TOLERANCES (UNLESS SPECIFIED)	mm	INCH
4 PLACES	±---	±---
3 PLACES	±---	±---
2 PLACES	±---	±---
1 PLACE	±---	±---
ANGULAR ±---°		

DRAFT WHERE APPLICABLE MUST REMAIN WITHIN DIMENSIONS

DIMENSION STYLE: IN/MM
SCALE: ---
DESIGN UNITS: METRIC
THIRD ANGLE PROJECTION

DRAWN BY: RSTONE DATE: 2014/03/21
CHECKED BY: G FARNSW DATE: ----
APPROVED BY: JFMURPHY DATE: 2014/10/16
MATERIAL NO.: SEE CHART

TITLE: 7.62MM EURO HEADER HORIZONTAL OPEN ENDS

MOLEX INCORPORATED

DOCUMENT NO.: SD-39730-001
SHEET NO.: 1 0F 1

SIZE: C

THIS DRAWING CONTAINS INFORMATION THAT IS PROPRIETARY TO MOLEX INCORPORATED AND SHOULD NOT BE USED WITHOUT WRITTEN PERMISSION