SAMZO | REAC/ROHS

REV	ECN NO	DESRIPTION	DESIGN	APPROVAL	DATE
A1	NEW	Replace frame			2018.06.12

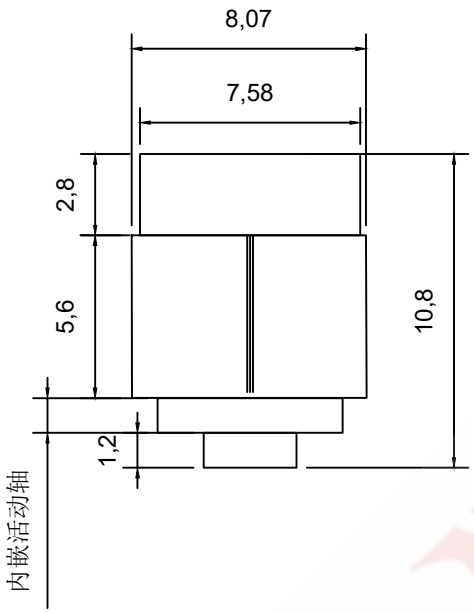

technical parameters
→.Impedance: 50Ω
→.Frequency range: 0 - 12.4G
→.Voltage standing wave ratio: For straight flexible cable, less than 1.15±0.02f (GHz)
→.Operating voltage: 335V max
→.Dielectric withstand voltage: 1000Vrms
→.Contact resistance: Inner conductor less than 3 mOhm, outer conductor less than 2 mOhm
→.Insulation resistance: greater than 500 MΩ
→.Durability: 500 times
→.Operating temperature: -65 to +165 (For PE CABLE, -40 to +85)
→Standards: MIL-C-39012, IEC169-15, CECC22110

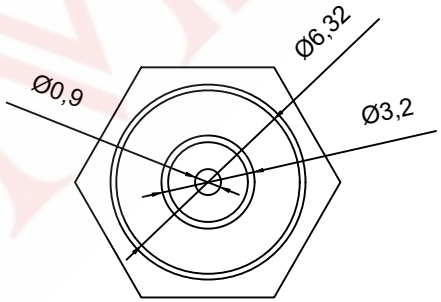

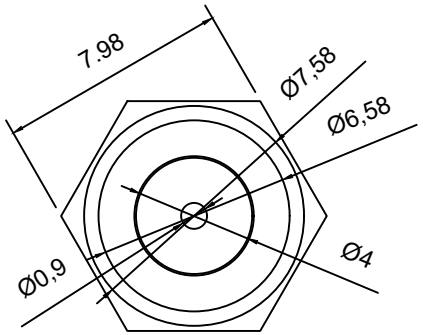

SMA-JJ-108-L0-1

- Surface treatment镀层:镀金
- Pin position脚位:L0-垂直
- Length体长:10.8mm
- Product number编号:JJ-IPEX
- Product series系列:SMA同轴射频连接器

ITEM	DESCRIPTION	MATERIAL	QTY	FINSH/COLOR					
C	插孔	HPB59-1	1	------				GENERAL TOLERANCE	
B	绝缘体	聚四氟乙烯	1	------				⩾0~2<	±0.15
A	主体	黄铜	1	镀金	DESIGN	WANGGUIFA	2018.06.12	⩾2~5<	±0.25
					CHECKED	ZHENGUILAN	2018.06.12	⩾0~2<	±0.15
					APPROVED	LILIANJIANG	2018.06.14	⩾5	±0.35

FIRST VIEW

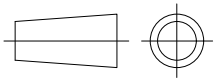

SCALE 1:1 UNIT mm

SAMZO COMPONENTS
Electronic switch and connector manufacturer

The copyright belongs to samzo parts [China] Co., Ltd. please use the material after samzo parts agree to authorize. The final right of interpretation belongs to samzo parts.
WWW.KKK-JP.COM

TITLE:: SMA转IPEX-JJ 10.8MM 直公头
DWG NO: SMAJJ108-P001
PART NO: SMAJJ-20230010
MODEL NO: SMA-JJ-108-L0-1
NAME: SMA COAXIAL RF CONNECTOR