THIS COPY IS PROVIDED ON A RESTRICTED BASIS AND IS NOT TO BE USED IN ANY WAY DETRIMENTAL TO THE INTERESTS OF PANDUIT CORP.

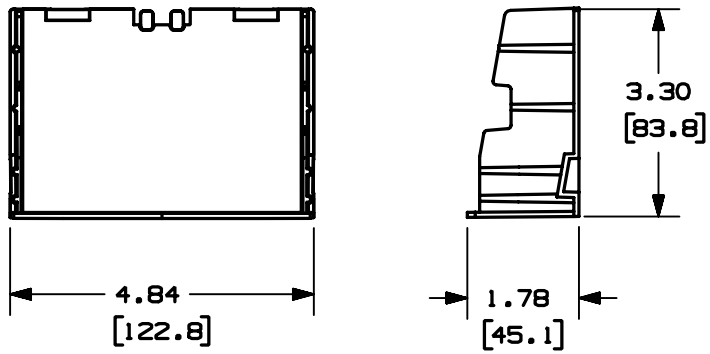

PANDUIT PART NO.	WEIGHT
OFR20DMB	.240 lbs / EACH (108.8 g / EACH)

NOTES:

1. SEE CURRENT CATALOG FOR ADDITIONAL PART NUMBER SUFFIXES TO INDICATE COLOR AND/OR PACKAGE QUANTITY.
2. DIMENSIONS IN PARENTHESES ARE IN METRIC.

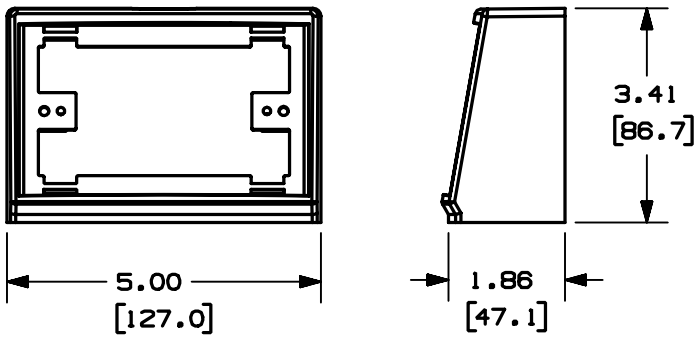

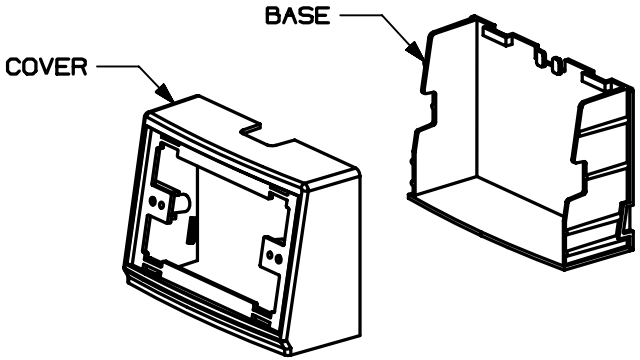

REV	DATE	BY	CHK	DESCRIPTION	ECN	CHK	CUST	SUP
1	04-28-03	JBN	RHMI	RELEASED TO PRODUCTION	38502-03	RGRO	RGRO	
R	03-20-03	JBN	RMHI	DRAWING RELEASED				

CAD FILENAME/LAYERS: D38502BC_DC_OFR20DMB_00B.PRT

PANDUIT CORP. TINLEY PARK, ILLINOIS

OFFICE FURNITURE DESK MOUNT BOX (OFR20DMB)
CUSTOMER DRAWING

UNLESS OTHERWISE SPECIFIED, DIMENSIONAL TOLERANCES ARE:
(.X) ± (.XXX) ±
(.XX) ± .03 [.8] ANGLES ±

UNLESS OTHERWISE SPECIFIED, ALL DIMENSIONS ARE GIVEN IN INCHES, THIRD ANGLE PROJECTION.

DRAWN BY: JBN
DATE: 03-20-03
CHK'D: RMHI
MAT'L: PVC
SCALE: NONE
DRAWING NO.: 38502-03
DWG SIZE: A