NOTES:
1.ELECTRICAL CHARACTERS
1-1.RATING: DC 9V 2.5A
1-2.CONTATCT RESISTANCE:<30mΩ
1-3.INSULATION RESISTANCE:≥100MΩ DC 500V:
1-4.WITHSTANDING VOLTAGE:AC 500V 1min;
1-5.LIFE:5.000 CYCLES，
2.MECHANICAL CHARACTERISTICS,
2-1.INSERTION&EXTRACTION FORCE:3~30N;
2-2.OPERATING TEMPERATURE:-30 ℃~+70℃

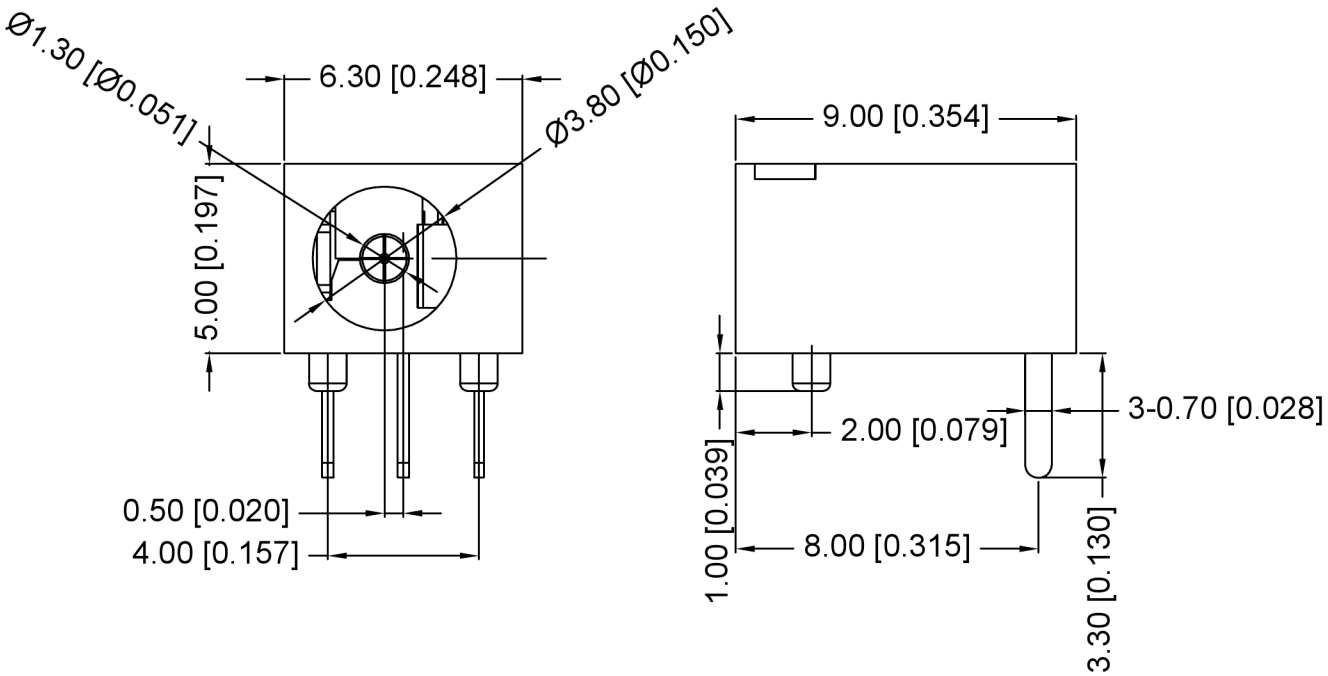

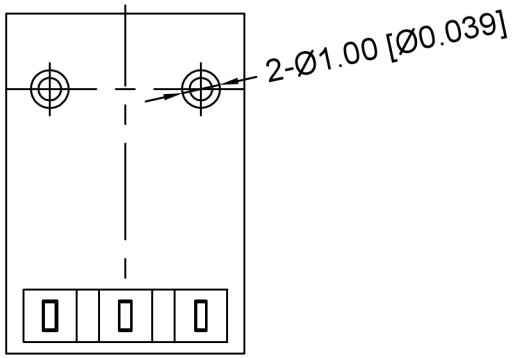

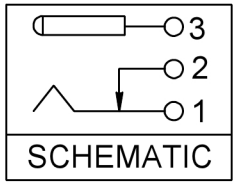

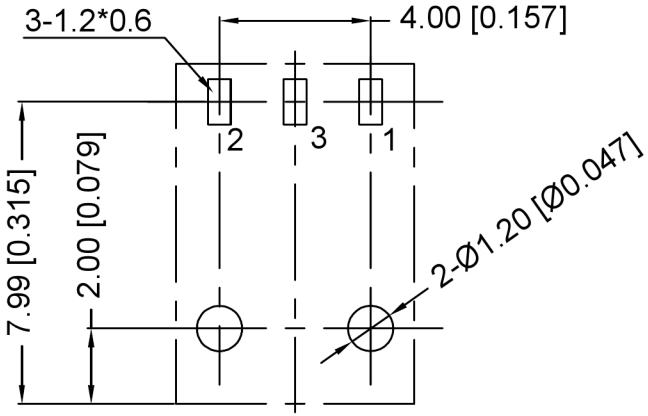

PCB HOLES(TOP VIEW)
GENERAL TOLERANCE:0.1mm

No.	PART NAME	TER'NO.	QTY	MATERIAL	REMARK
⑤	TERMINAL	3	1	BRASS t=0.3	CuSn
④	BREAK TERMINAL	2	1	BRASS t=0.3	CuSn
③	TIP SPRING	1	1	MANGANESE STEEL	SnSb
②	COVER		1	PA66	BLACK
①	HOUSING		1	PPA	BLACK

广东星坤科技股份有限公司
文件工程章

MARK	DESCRIPTION	DATE	REVISED	APPROVED

REVISIONS

UNSPECIFIED TOLERANCES	
ANGLAR	±5°
L≤ 4	±0.2
4<L≤ 16	±0.3
16<L≤ 63	±0.4
L> 63	±0.5

www.helloxkb.com www.helloxkb.cn www.xk-dg.cn

XKB INDUSTRIAL PRECISION CO.,LIMITED

DSND		SCALE: N/A	MODEL TYPE: DC POWER JACK
DWN		VIEW:	PART NO.: DC-003-2A-1.3
CHKD		UNIT: mm/in	DWG NO.:
APPD		SIZE: A4	

WEIGHT	SHEET	REVISIC
	1/1	A0