THIS DRAWING IS UNPUBLISHED. RELEASED FOR PUBLICATION -,- .
© COPYRIGHT - By - ALL RIGHTS RESERVED.

LOC	DIST
AF	50

REVISIONS

P	LTR	DESCRIPTION	DATE	DWN	APVD
	B	REVISED PER ECR-13-011489	11DEC2013	KH	PD

1 CONTINUOUS STRIP ON REELS.

2 WIRE SIZE IS #26-#22 AWG.

3 MATING TAB THK IS 0.51±0.025 [.020±.001].

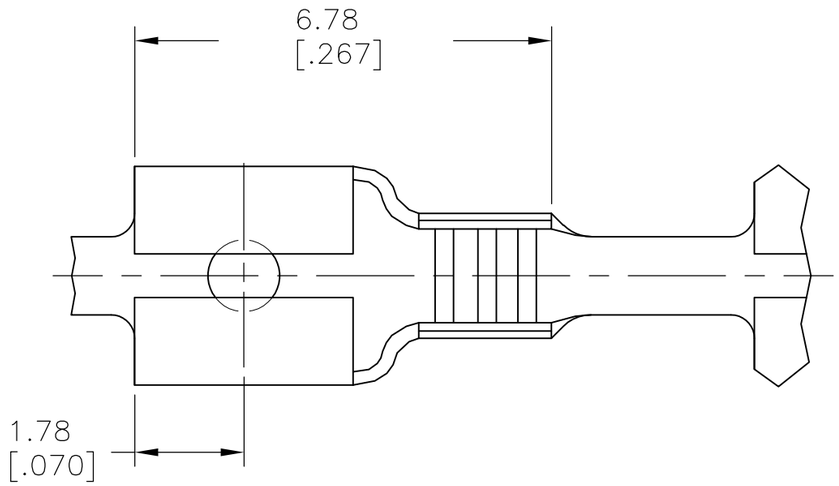

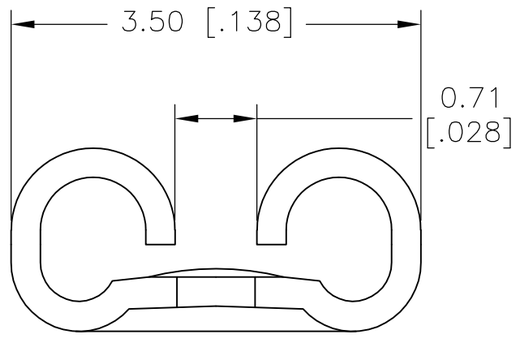

VIEW A—A
SCALE 10:1

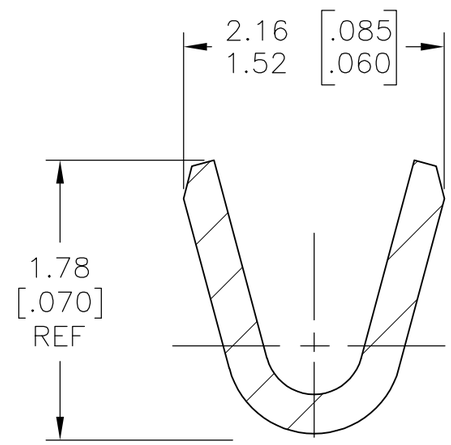

SECTION B—B
SCALE 10:1

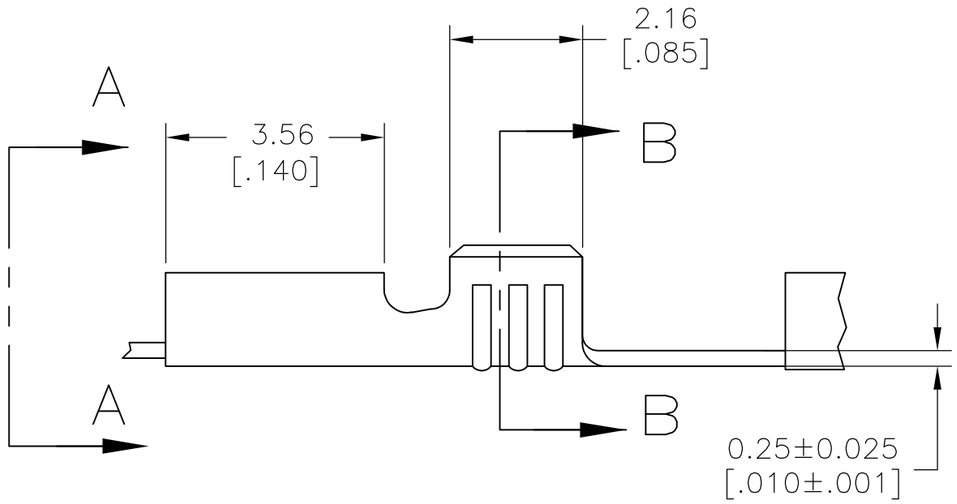

1742936-1
PART NO.

THIS DRAWING IS A CONTROLLED DOCUMENT.		DWN JR RUTH 21OCT11	TE Connectivity
DIMENSIONS: mm [INCHES]	TOLERANCES UNLESS OTHERWISE SPECIFIED: 0 PLC ± - ; 1 PLC ± - ; 2 PLC ± 0.25 [.010] ; 3 PLC ± - ; 4 PLC ± - ; ANGLES ± -	CHK PETE DESANTIS 21OCT11	NAME: RECEPTACLE, FASTON, 2.79 [.110] SERIES —
		APVD PETE DESANTIS 21OCT11	
		PRODUCT SPEC —	
		APPLICATION SPEC 114-2036	SIZE A3 · CAGE CODE 00779 · DRAWING NO C-1742936 · RESTRICTED TO —
MATERIAL BRASS	FINISH TIN PLATE	WEIGHT —	
		CUSTOMER DRAWING	SCALE 8:1 · SHEET 1 OF 1 · REV B