Downloaded from Arrow.com.

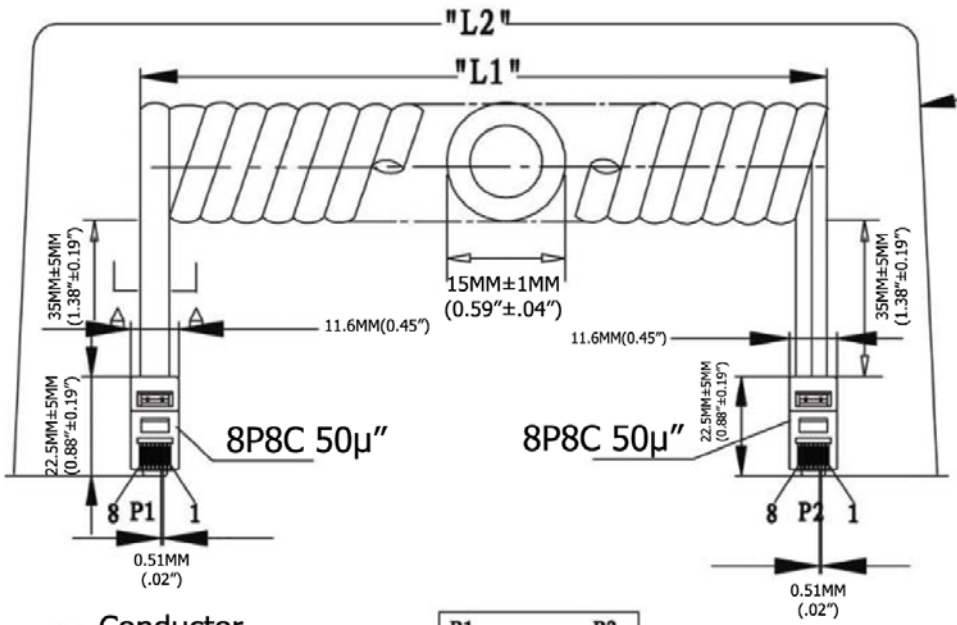

Extended length is with 500g of force

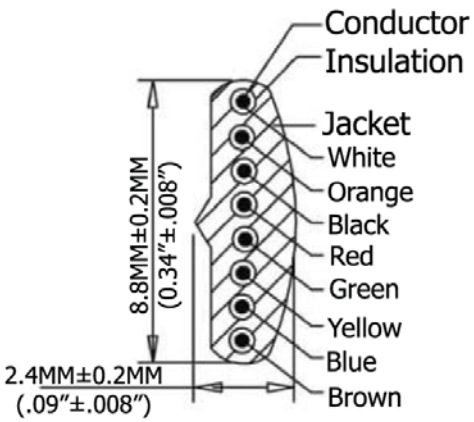

SEC: A=A

P1		P2
1	WHITE	1
2	ORANGE	2
3	BLACK	3
4	RED	4
5	GREEN	5
6	YELLOW	6
7	BLUE	7
8	BROWN	8

Extended Length ("L2")	Typical Retracted Length ("L1")
84.0 Inches - 96.6 Inches	39.5 Inches
2,133.6MM-2,453.64MM	1,003.3MM

Material:

- Plug Housing: Polycarbonate, clear
- Plug Terminal: 0.36"[0.14MM] Thick Phosphor Bronze
- Connector: 50µ" of Selective Gold Contact Plating
  - Area, Gold flash over the remainder
  - Over 2.54µm[.000100] thick nickel underplate
- Conductor(X8C): 26AWG (0.12X12) Bare Copper
- Insulation(X8C): PP6331 ID 0.95-1.0
- Jacke: PVC No UL 80 P
- Package: Individual PE Bag

Electrical:

- Voltage rating: 30V (DC)

RoHS Complaint

Scale	1:1							Name
TOLERANCE						Drawn	11.02.11	Chappell
X.X	±0.40					Approved		
X.XX	±0.25							
X.XXX	±0.15							
Angle	±3°							
			Modification	Date	Name			

ASSMANN WSW components

Item No.
AT-C-26-8/8/B-7/R

Title
NON-UL 26AWG (0.16/7)*8C, O.D.: 2.4*8.8MM, Reverse Plug, 50µ" of contact plating, BLACK

Drawing No.

rev00

Replace

Sheet