REVISIONS					
REV.	ECN NO.	LOCATION	DESCRIPTION	DATE	DESIGN
A0	N/A		INITIAL RELEASE	/	/
A1	N/A		图面升级整理图面	2025.03.10	阿树

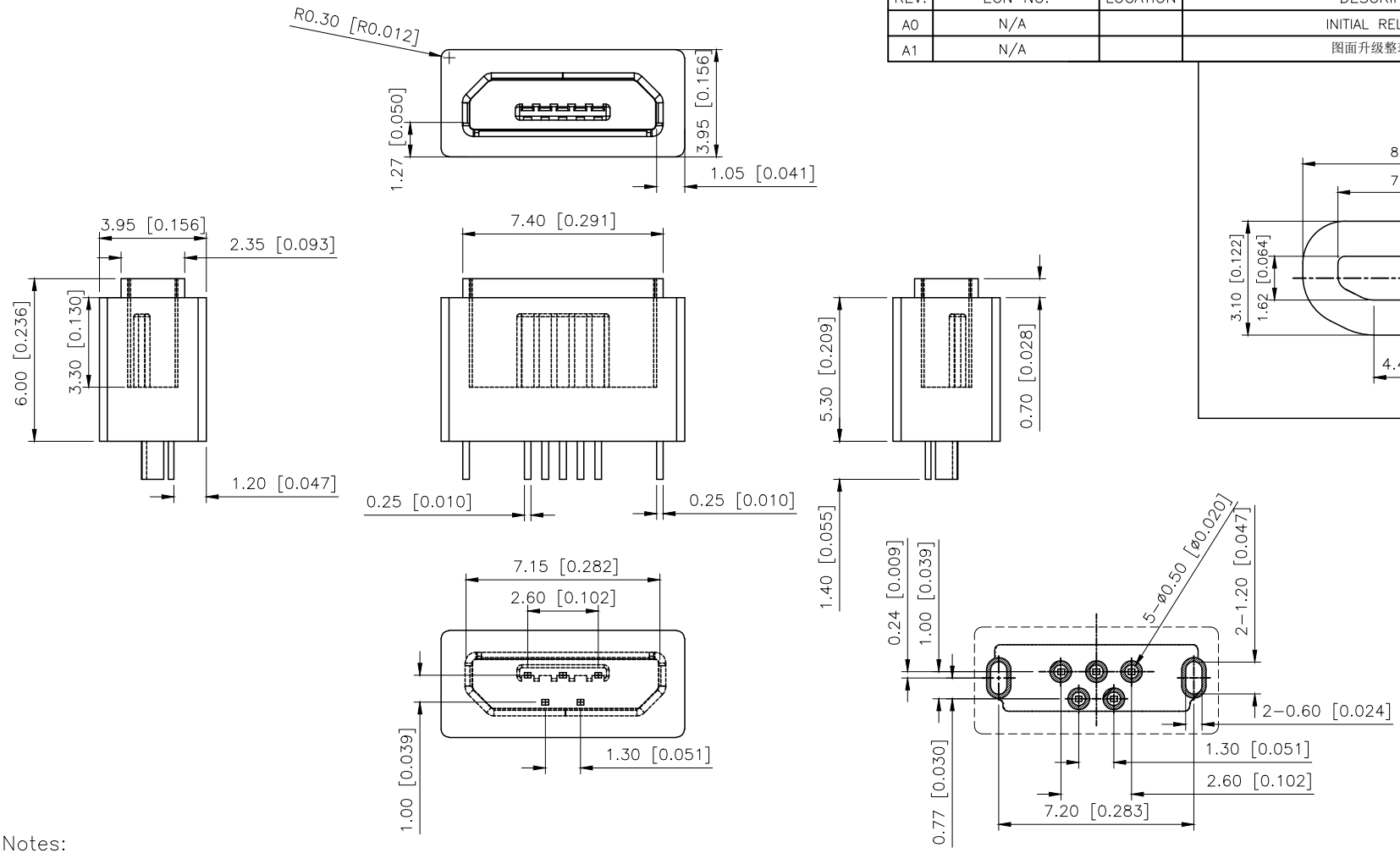

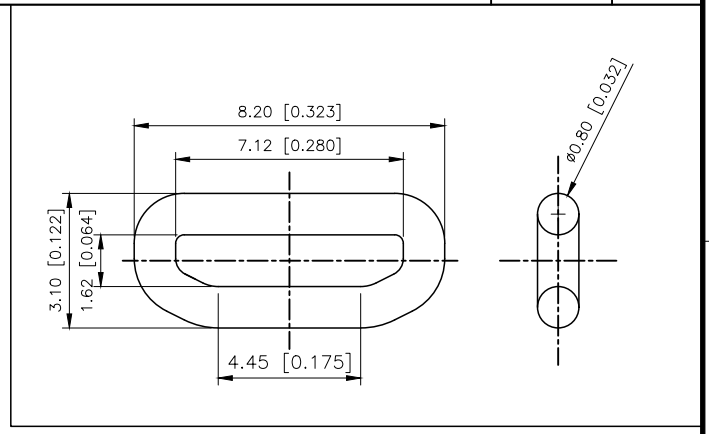

P.C.B LAYOUT

Notes:
1.Dimension shall be interpreted per ASME Y14.5 M1994.
2.Dimension marked ▽C & ▼ should be checked by Q.C.and process, engineers and ▽C should also check the CPK data.

Specification:
1. Current Rating: 1.5 A Max
2. Voltage Rating: 30V AC,DC
3. Dielectric Strength: 100V AC RMS for 1 minute.
4.Contact Resistance: 50 mΩ Max.
5. Insulator Resistance: 100M Ω Min.
6. Mating/Unmating cycles: 6000cycles
7.Temperature: −30°Cto+80

ITEM	PAPT NAME	QTY	MATERIAL	FINISHING
③	Shell	1	SUS	T=0.25mm
②	Terminal	5	Copper alloy	T=0.2mm
①	Housing	1	HI-TEMP.PLASIC UL 94V-0	BLACK

AuGLAR	±5°
X.	±0.40
X.x	±0.30
X.xx	±0.20
X.xxx	±0.15
UNSPECIFIED TOLERAuCES	

XKB Connection 星创

DESIGN	阿树	VIEW:	MODEL TYPE: MICRO USB
CHECKED		UNIT: mm/in	PART NO.: U-E-M5SS-W-6
APPROVED		SIZE: A4	DWG NO.:

XKB INDUSTRIAL PRECISION CO.,LIMITED

SCALE	PAGE	REVISION
N/A	1/1	A1