PCB Pocket

SCHROFF

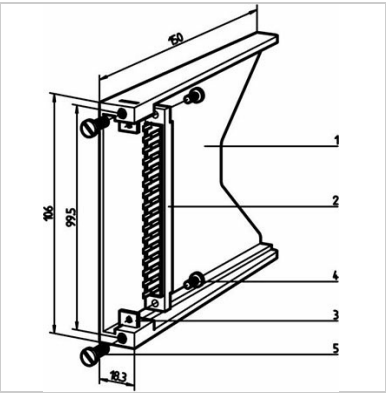

Retention bracket (DIN 41612)

Catalog Number: 20800-032

Back To Product

- Accepts PCBs in euroboard format, 100 x 160 mm
- For female connectors to EN 60603 (DIN 41612)

Description:

PCB Pocket

Product family:

PCB Accessories

Delivery Includes:

kit

Select product specifications before modifying or adding to project list or requesting a quote.

Clear Selection

Quantity 1

Add Item to Project List +

Links

Native CAD files

Other Views

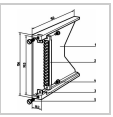

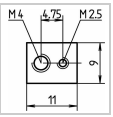

Technical Data

Qty	1 piece
Color	grey
Material	PBT (P)
Item	1
Description	PCB pocket

© 2018 nVent. All rights reserved | Privacy Policy | Terms of Use | Cookie Policy | Imprint | Site Map

Connect With Us

Downloaded from Arrow.com.