REVISIONS					
REV	ECO	DESCRIPTION	DATE	BY	APPR
B1	-	RELEASED DRAWING	JULY-04-2014	BEN	TOMMY

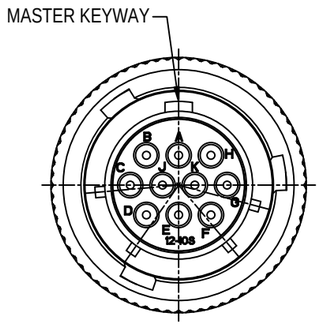

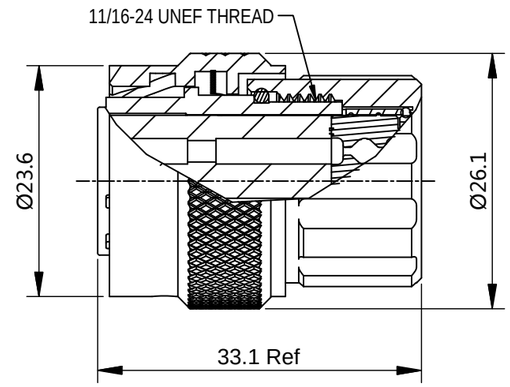

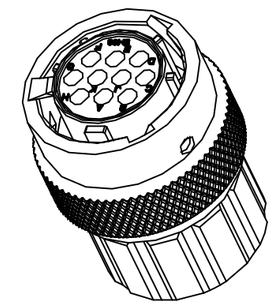

NOTES : (UNLESS OTHERWISE SPECIFIED)

1. MATERIAL :
   - SHELL : ZINC ALLOY , NICKEL PLATED.
   - INSERT : THERMOPLASTIC , UL94 V-0.
   - END CAP : THERMOPLASTIC , UL94 V-0.
   - COUPLING NUT : AL ALLOY , NICKEL PLATED.
   - WAVE WASHER : STAINLESS STEEL.
   - O-RING : NBR/SILICONE RUBBER.
   - WIRE SEAL : SILICONE RUBBER.
   - PLASTIC BUSHING : THERMOPLASTIC , UL94 V-0.
2. SPECIFICATIONS :
   - 2.1 RATED CURRENT :
     - 2.1.1 STAMPED CONTACT 5A (MAX).
     - 2.1.2 MACHINED CONTACT 7.5A(MAX).
   - 2.2 RATED VOLTAGE : 150V (AC/DC) .
   - 2.3 OPERATING TEMPERATURE : SEE CHART.
   - 2.4 DIELECTRIC WITHSTANDING VOLTAGE : LESS THAN 2 MILLIAMPS CURRENT LEAKAGE@1500 VOLTS AC.
   - 2.5 INSULATION RESISTANCE : 5000 MEGOHMS MIN.
   - 2.6 IP--CLASS : IP67.
   - 2.7 MATING CYCLES DURABILITY : 500 CYCLES(MIN).
   - 2.8 ROHS COMPLIANT.
3. SUITABLE CONTACTS : 20# CONTACTS.
4. ALL DIMENSIONS ARE FOR REFERENCE USE ONLY.
5. CONTACT SIZE AND REAR SEAL WIRE RANGE :

CONTACT SIZE	MIN. INSUL O.D.	MAX. INSUL O.D.	WIRE RANGE
20#	Ø1.6mm	Ø2.6mm	20 - 30AWG

KEY POS	PART NUMBER	
	-40°C ~ 105°C	-40°C ~ 125°C
N	RT0W61210SNHEC	RT0W61210SNHEC03
W	RT0W61210SWHEC	RT0W61210SWHEC03
X	RT0W61210SXHEC	RT0W61210SXHEC03
Y	RT0W61210SYHEC	RT0W61210SYHEC03
Z	RT0W61210SZHEC	RT0W61210SZHEC03

QUANTITY	PART NUMBER	DESCRIPTION	ITEM
	SEE PART NUMBER CHART		

MATERIALS LIST

UNLESS OTHERWISE SPECIFIED
1) All dimensions are in metric(mm).
2) Tolerances are as follows:
1 PL DEC ±0.30 | Fractions ±1/64
2 PL DEC ±0.15 | Angles ±1°
3 PL DEC ±0.08
3) Note reference = X

MATERIAL SPECIFICATIONS:

PROCESS SPECIFICATIONS:

NEXT ASS'Y:

SIGNATURES		DATE
DRAWN:	BEN	JULY-04-2014
CHECKED:		
ENGINEER:		
APPROVAL:		
CUSTOMER:		

THIS DRAWING IS SUPPLIED FOR INFORMATION ONLY. DESIGN FEATURES, SPECIFICATIONS AND PERFORMANCE DATA SHOWN HEREON ARE THE PROPERTY OF THE AMPHENOL CORPORATION. NO RIGHTS OF REPRODUCTION ARE IMPLIED. ALL DIMENSIONS ARE SUBJECT TO NORMAL MANUFACTURING VARIATIONS.

Amphenol
Sine Systems - www.amphenol-sine.com
44724 Morley Drive
Clinton Township, MI 48036

ECO-MATE, PLUG,
SIZE 12, 10POS, SOCKET,END CAP.

SIZE	TYPE	DWG NO:	REVISION
B	C-	RT0W61210S*HEC*	B1

SCALE: NONE SHEET 1 OF 1

TITLE: ECO-MATE, PLUG, SIZE 12, 10POS, SOCKET,END CAP.
DWG NO: RT0W61210S*HEC*
REV: B1
SH: 1
OF: 1