8P M12 FEMALE

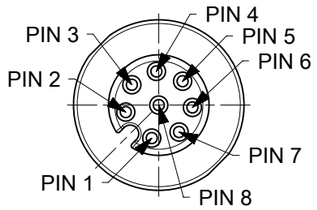

PIN	WIRE COLOR	PIN	WIRE COLOR
1	WH	5	GY
2	BN	6	PK
3	GN	7	BU
4	YE	8	RD

8P M12 MALE

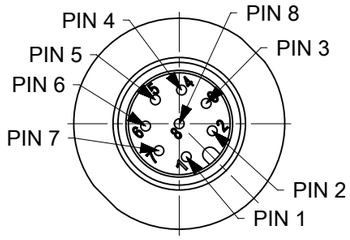

PIN	WIRE COLOR	PIN	WIRE COLOR
1	WH	5	GY
2	BN	6	PK
3	GN	7	BU
4	YE	8	RD

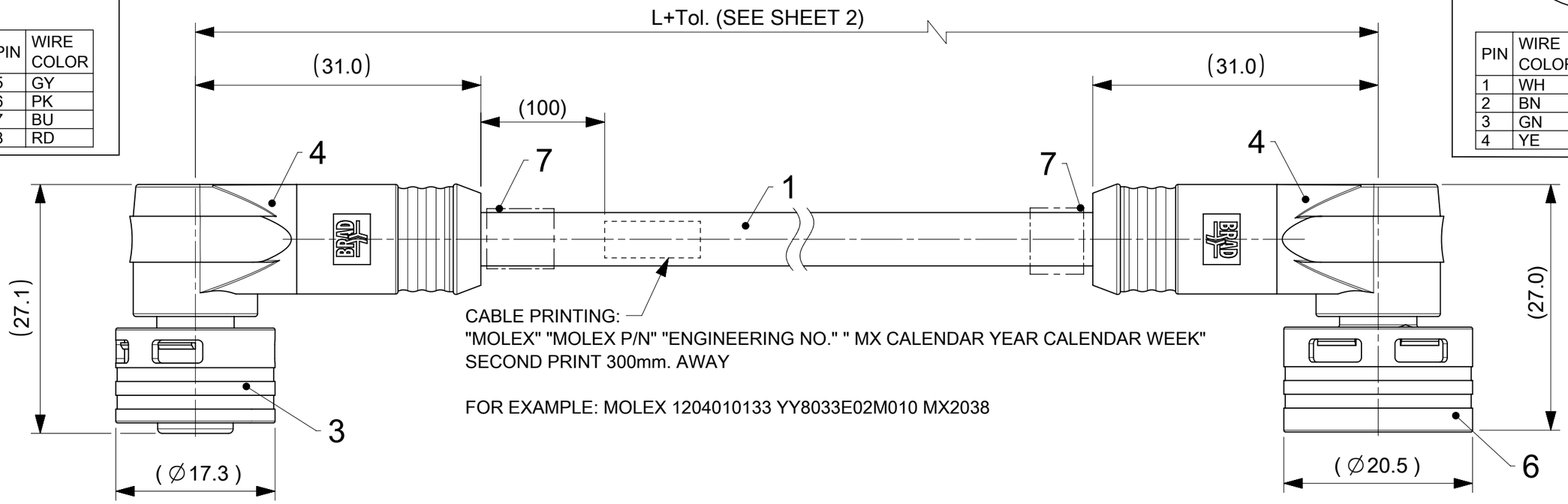

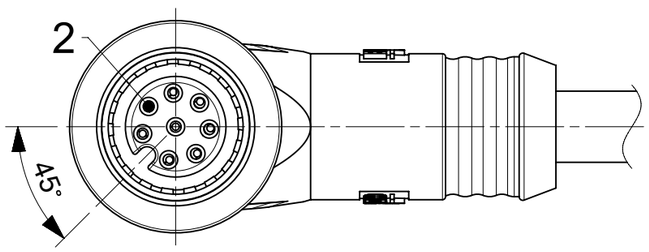

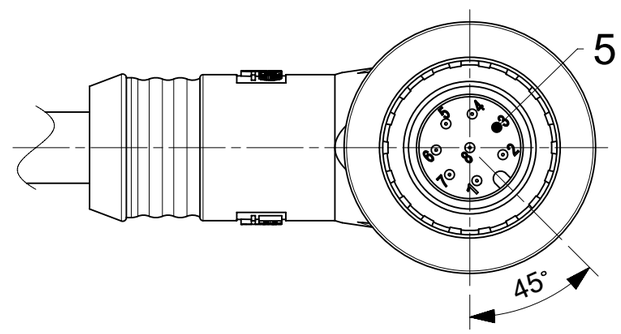

NOTES:
1. PARTS ACC. TO PRODUCT SPECIFICATION 1204000001 PS P10 AND IN STYLE OF IEC-61076-2-010
2. BOM & PART LIST - SEE SHEET 2
3. RATED VOLTAGE :
   8 CONTACTS: 30V AC OR DC
   RATED CURRENT:
   8 CONTACTS: 2A, DERATING HAS TO BE CONSIDERED
   OVERVOLTAGE CATEGORY: 3
   POLLUTION DEGREE: 3, ONLY IN MATED AND LOCKED CONDITION
4. PROTECTION CLASS: IP 67, ONLY IN MATED AND LOCKED CONDITION
5. TEMPERATURE RANGE:
   TEMPERATURE PLUG/SOCKET: -40 °C TO +85 °C
   TEMPERATURE CABLE: SEE CABLE LIST
6. MECHANICAL OPERATIONS: 100 CYCLES
7. MATES WITH ULTRA-LOCK M12 RECEPTACLES
8. PACKAGING: THE CORDSETS ARE SINGLE PACKED IN PLASTIC BAGS AND DELIVERED IN CARTON BOXES
9. UL CSA FILE REGISTRATION PENDING

DOCUMENT STATUS	P1	RELEASE DATE	2023/01/31 08:21:27

THIS DRAWING CONTAINS INFORMATION THAT IS PROPRIETARY TO MOLEX ELECTRONIC TECHNOLOGIES, LLC AND SHOULD NOT BE USED WITHOUT WRITTEN PERMISSION

FUNCTIONAL SYMBOLS: F/A = 0, F/C = 0, F/P = 0
DIVISIONAL SYMBOLS

DIMENSION UNITS	SCALE
mm	2:1

GENERAL TOLERANCES (UNLESS SPECIFIED)

ANGULAR TOL	±	1.0 °
4 PLACES	±	
3 PLACES	±	
2 PLACES	±	0.05
1 PLACE	±	0.3
0 PLACES	±	0.5

DRAFT WHERE APPLICABLE MUST REMAIN WITHIN DIMENSIONS

CURRENT REV DESC: NOTES AND CABLE LIST UPDATED

EC NO: 736602
DRWN: RSCHIEBER 2023/01/27
CHK'D: RSILLER 2023/01/31
APPR: RSILLER 2023/01/31

INITIAL REVISION:
DRWN: MDHARMANTI 2021/03/19
APPR: RSILLER 2022/10/14

THIRD ANGLE PROJECTION | DRAWING: A3-SIZE | SERIES: 120401

molex

CSE U12 8P AC FE MA RA XM DE UNSH BK

PRODUCT CUSTOMER DRAWING

DOCUMENT NUMBER	DOC TYPE	DOC PART	REVISION
1204010133	PSD	000	A1

MATERIAL NUMBER	CUSTOMER	SHEET NUMBER
SEE SHEET 2	GENERAL MARKET	1 OF 2

FORMAT: master_molex_A3
REVISION: J
DATE: 2020/01/14

PART No MATRIX

Y	Y	X	0	3	3	X	X	X	X	X	X	X	X	X
													OPTIONS	

- YY= ULTRA LOCK 2.0 DOUBLE ENDED
- POLES: 8 = 8 POLES
- HEADER : 033 = FEMALE RIGHT ANGLE - MALE RIGHT ANGLE
- CABLE: E02 - 8x0.25 PVC BLACK; B41 - 8x0.25 WSOR BLACK; H08 - 8x0.25 PUR-LS0H BLACK
- UNIT: M = METER; F = FEET; C = CENTIMETER; T = 10M
- LENGTH: EXAMPLE: 010 = 1 m; 050 = 5 m; 100 = 10 m
- OVERMOLD: BLANK = STANDARD BRAD: -YELLOW IN THE USA -BLACK IN EUROPE; A = GREY; E = RED; G = BLACK; Y = YELLOW; H = STD. COLOUR WITH TWO ID-TAG CARRIERS

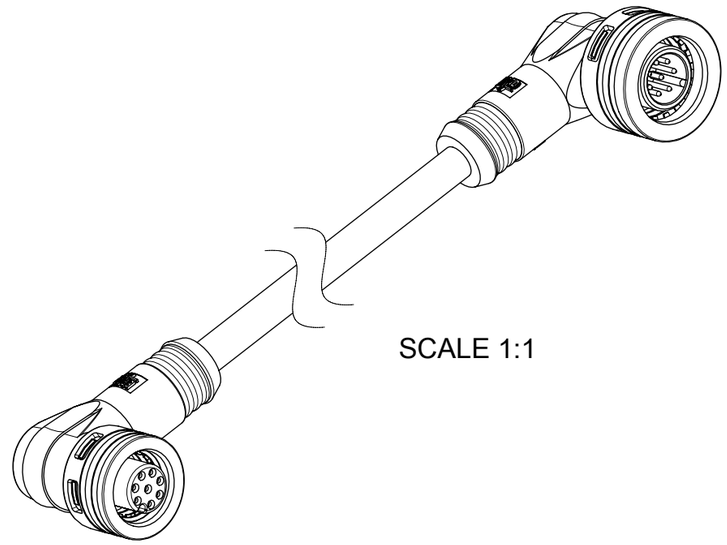

SCALE 1:1

CABLE LIST

8P	CABLE TYPE	DESCRIPTION	MATERIAL	FINISH/COLOR	FIXED INSTALLATION *		FLEXIBLE INSTALLATION **		DRAG CHAIN	
					MIN.	MAX.	MIN.	MAX.	MIN.	MAX.
X	E02	8X0.25MM;UNSHLD;PVC;BK;OD=6.60MM	PVC	BLACK	-30°C	+80°C	-10°C	+80°C	NOT SUITABLE	
X	B41	CABLE 8X0.25 TPU BK D6.40 TPE UNSH DCS	PUR WSOR	BLACK	-40°C	+90°C	-25°C	+80°C	-5°C	+60°C
X	H08	CABLE PUR;BLK 8X0.25MM-LSOH;UL OD=6.10	PUR-LS0H	BLACK	-40°C	+80°C	-25°C	+80°C	+5°C	+60°C

* FIXED POSITION WITHOUT ACCIDENTAL CRUSHING OF VIBRATION.
** FREE MOTION WITHOUT PERIODIC RECURRENCE OR FORCED GUIDANCE.

PART LIST

MOLEX NO.	ENGINEERING NO.	LENGHT (mm)
1204010133	YY8033E02M010	1000
1204010134	YY8033E02M020	2000
1204010135	YY8033E02M050	5000
1204010136	YY8033E02M100	10000
1204010137	YY8033B41M010	1000
1204010138	YY8033B41M020	2000
1204010139	YY8033B41M050	5000
1204010140	YY8033B41M100	10000
1204010141	YY8033H08M010	1000
1204010142	YY8033H08M020	2000
1204010143	YY8033H08M050	5000
1204010144	YY8033H08M100	10000

CABLE LENGTH TOLERANCES	
LENGTH	TOLERANCE
0m-1m	+40 mm
>1m-5m	+60 mm
>5m-10m	+80 mm
>10m-20m	+140 mm
>20m-30m	+160 mm
>30m	+1% length

BILL OF MATERIAL

ITEM	QTY	DESCRIPTION	MATERIAL	FINISH/COLOR
1	-	CABLE	SEE CABLE LIST	SEE CABLE LIST
2	8	CONTACT 8 FE TUR AU	BRASS	GOLD OVER NICKEL PLATED
3	1	PLG U12 8P AC FE PA UNSH	-	-
4	2	OVERMOLD	TPC	SEE MATRIX
5	8	CONTACT 8 MA TUR AU	BRASS	GOLD OVER NICKEL PLATED
6	1	PLG U12 8P AC MA PA UNSH WT	-	-
7	SEE PN MATRIX *	I/D CARRIER DIA 4-7MMX30MM	PVC	TRANSPARENT

* IF IN MATRIX IS "H" - ADD ID-CARRIERS ON THE BOTH SIDES HARNESS

DOCUMENT STATUS	P1	RELEASE DATE	2023/01/31 08:21:27

THIS DRAWING CONTAINS INFORMATION THAT IS PROPRIETARY TO MOLEX ELECTRONIC TECHNOLOGIES, LLC AND SHOULD NOT BE USED WITHOUT WRITTEN PERMISSION

FUNCTIONAL SYMBOLS: FA = 0; FC = 0; FD = 0

DIVISIONAL SYMBOLS

DIMENSION UNITS	SCALE
mm	2:1

GENERAL TOLERANCES (UNLESS SPECIFIED)

ANGULAR TOL	±	1.0 °
4 PLACES	±	
3 PLACES	±	
2 PLACES	±	0.05
1 PLACE	±	0.3
0 PLACES	±	0.5

DRAFT WHERE APPLICABLE MUST REMAIN WITHIN DIMENSIONS

CURRENT REV DESC: NOTES AND CABLE LIST UPDATED

EC NO: 736602
DRWN: RSCHIEBER 2023/01/27
CHK'D: RSILLER 2023/01/31
APPR: RSILLER 2023/01/31

INITIAL REVISION:
DRWN: MDHARMANTI 2021/03/19
APPR: RSILLER 2022/10/14

THIRD ANGLE PROJECTION | DRAWING: A3-SIZE | SERIES: 120401

molex

CSE U12 8P AC FE MA RA XM DE UNSH BK

PRODUCT CUSTOMER DRAWING

DOCUMENT NUMBER	DOC TYPE	DOC PART	REVISION
1204010133	PSD	000	A1

MATERIAL NUMBER	CUSTOMER	SHEET NUMBER
SEE PART LIST	GENERAL MARKET	2 OF 2