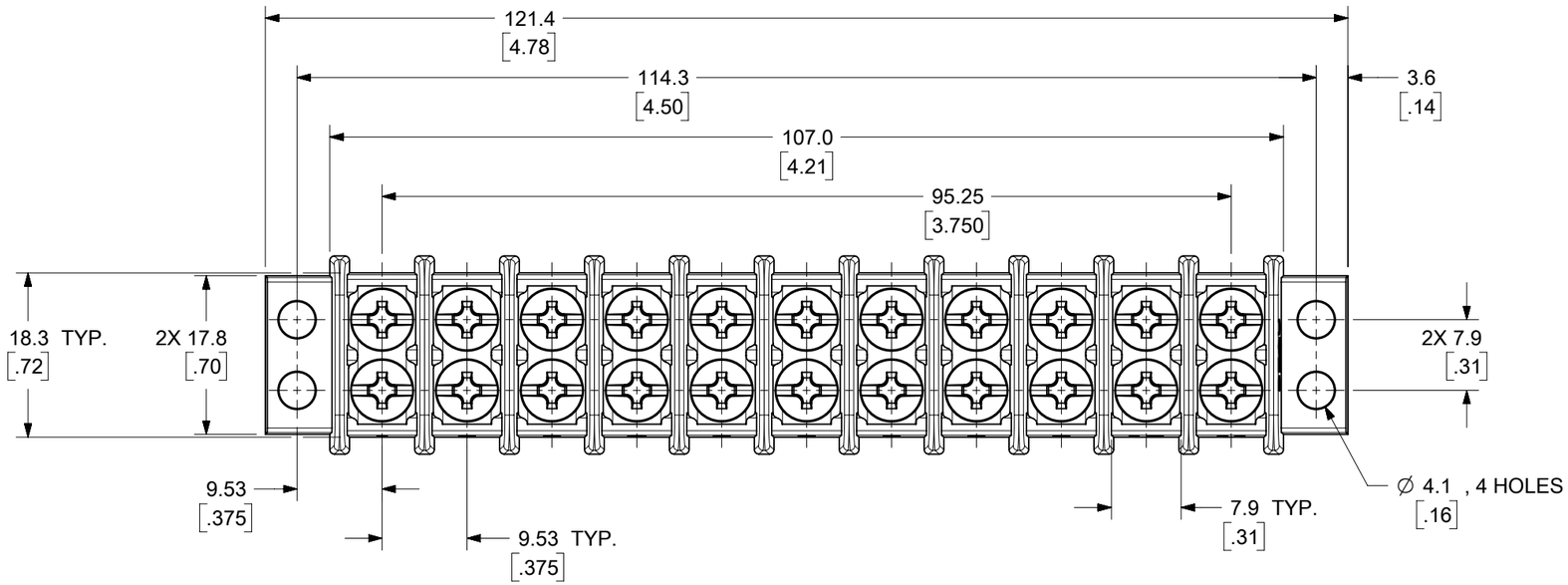

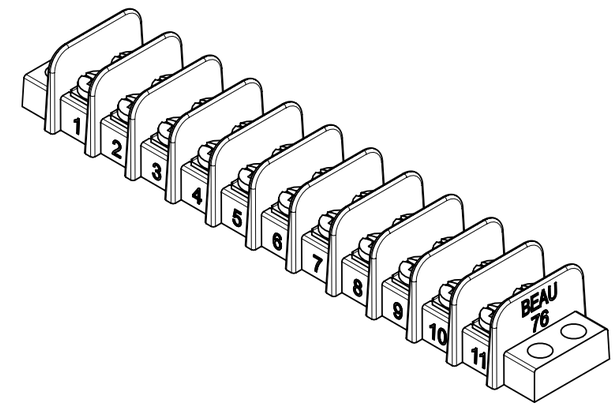

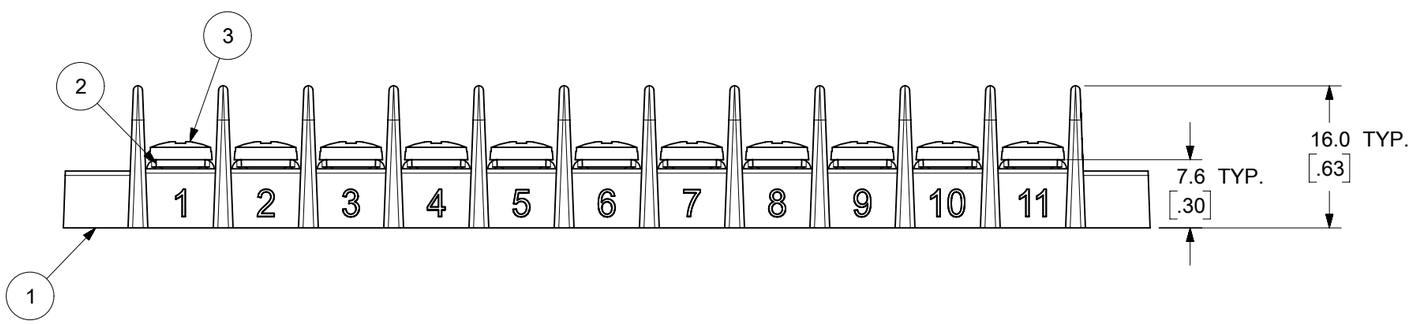

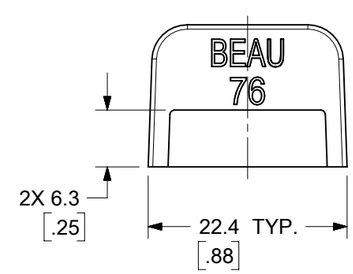

NOTES:

1. MATERIAL: SEE TABLE
2. FINISHES: SEE TABLE
3. INCH DIMS ARE SHOWN IN BRACKETS [XXX]

TOLERANCES			
MM	TOL	INCH	TOL
0-6	±0.25	0-.24	±.010
>6-30	±0.40	.24-1.18	±.016
>30-120	±0.50	1.18-4.76	±.020
>120	±0.80	>4.76	±.031

ITEM	QTY.	DESCRIPTION	MATERIAL	FINISH
3	22	SCREW, #6-32X.250, BGHD, PHIL-SLOT	STEEL	ZINC W/CHROMATE
2	11	TERMINAL PLATE	BRASS	NICKEL
1	1	INSULATOR	THERMOPLASTIC	BLACK

DOCUMENT STATUS	P1	RELEASE DATE	2023/06/30 22:29:41

FORMAT: Eng-lega-prod-prod-B
REVISION: E
DATE: 2020/01/14

FUNCTIONAL SYMBOLS: E/A = 0; E/C = 0; E/P = 0

DIVISIONAL SYMBOLS

DIMENSION UNITS: MM/INCH
SCALE: 1.5:1

GENERAL TOLERANCES (UNLESS SPECIFIED)

	MM	INCH
4 PLACES	± ---	± ---
3 PLACES	± ---	± SEE CHART
2 PLACES	± SEE CHART	± SEE CHART
1 PLACE	± SEE CHART	± ---
0 PLACES	± ---	± ---
ANGULAR TOL	± ---	

DRAFT WHERE APPLICABLE MUST REMAIN WITHIN DIMENSIONS

THIS DRAWING CONTAINS INFORMATION THAT IS PROPRIETARY TO MOLEX ELECTRONIC TECHNOLOGIES, LLC AND SHOULD NOT BE USED WITHOUT WRITTEN PERMISSION

CURRENT REV DESC: NEW RELEASE

EC NO: 752368
DRWN: ABENJAMINLW 2023/05/31
CHK'D: DACHAMMER 2023/06/06
APPR: JFMURPHY 2023/06/30

INITIAL REVISION:
DRWN: ABENJAMINLW 2023/05/31
APPR: JFMURPHY 2023/06/30

THIRD ANGLE PROJECTION | DRAWING: B-SIZE | SERIES: 38760

molex

9.53MM [.375] DOUBLE ROW
BTS ASSEMBLY

PRODUCT CUSTOMER DRAWING

DOCUMENT NUMBER	DOC TYPE	DOC PART	REVISION
387600511	PSD	000	A

MATERIAL NUMBER	CUSTOMER	SHEET NUMBER
387600511		1 OF 1

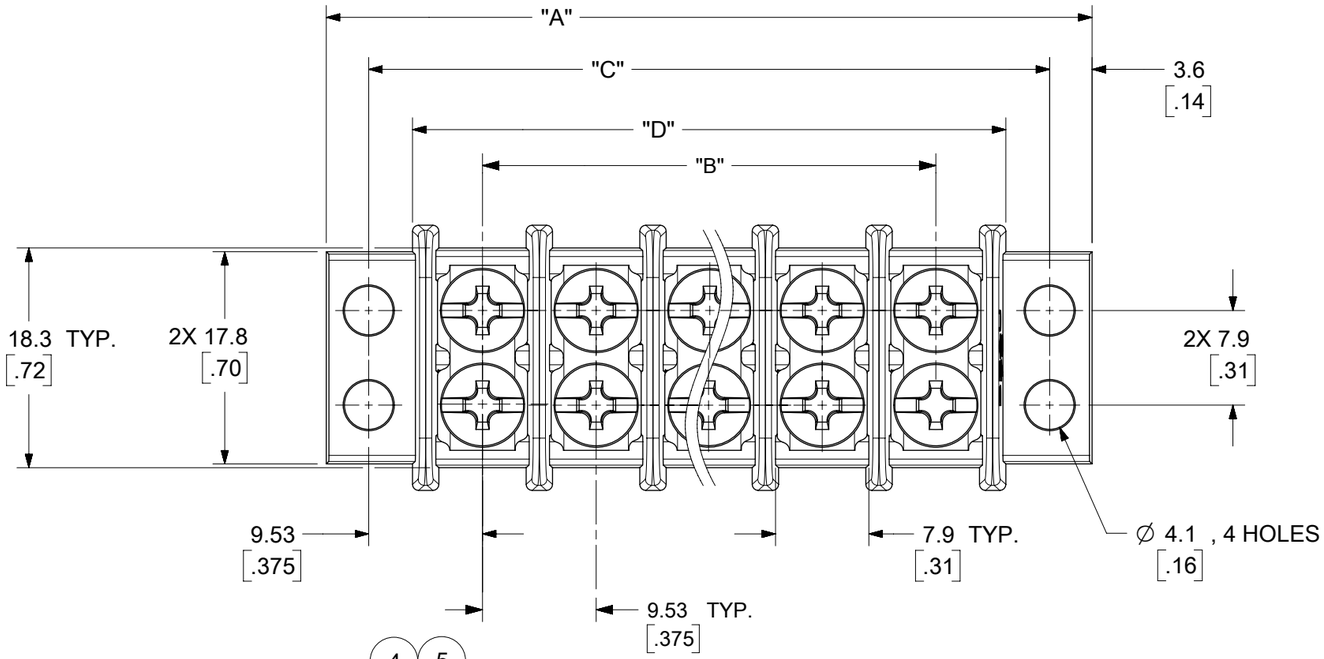

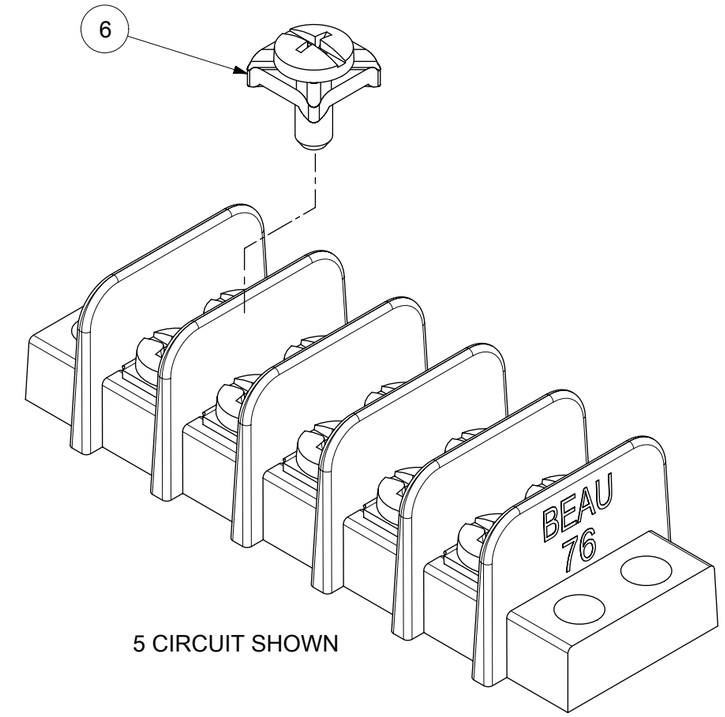

5 CIRCUIT SHOWN

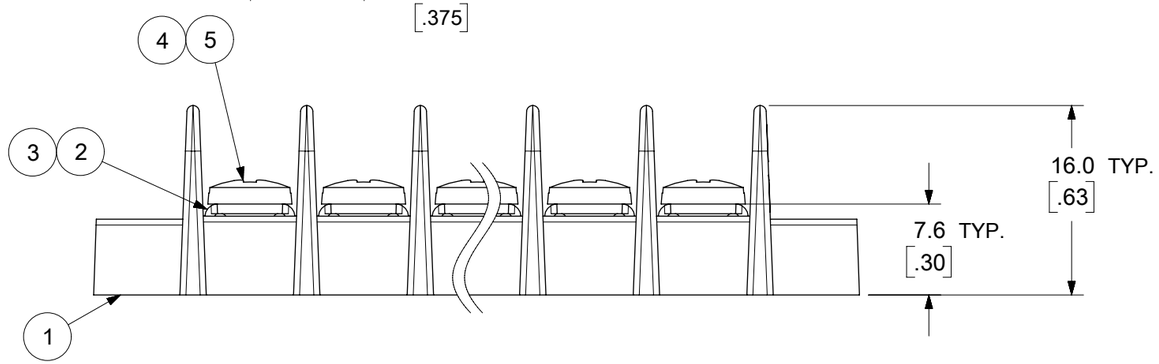

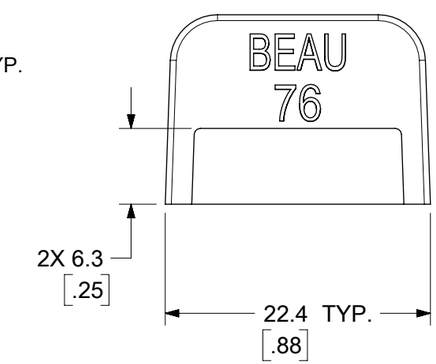

NOTES:
1. MATERIAL: SEE TABLE
2. FINISHES: SEE TABLE
3. PRODUCT SPECIFICATION: NOT REQUIRED
4. PACKAGING: NOT REQUIRED
5. MATES WITH: NONE
6. "XX" REFERS TO THE QUANTITY OF CIRCUITS.
7. INCH DIMENSIONS ARE SHOWN IN BRACKETS [.XXX].
8. ASSEMBLY IS ROHS COMPLIANT.

ITEM	QTY.	DESCRIPTION	MATERIAL	FINISH
6	XX*2	SCREW, #6-32X.250, PAN HD, PHIL-SLOT W/WSHR (-50 OPT)	STEEL	ZINC W/CHROMATE
5	XX*2	SCREW, #6-32X.250, BGHD, PHIL-SLOT (-49 OPTION)	BRASS	NICKEL
4	XX*2	SCREW, #6-32X.250, BGHD, PHIL-SLOT (STANDARD)	STEEL	ZINC W/CHROMATE
3	XX	TERMINAL PLATE (-49 OPTION)	BRASS	TIN
2	XX	TERMINAL PLATE	BRASS	NICKEL
1	1	INSULATOR	THERMOPLASTIC	BLACK

TOLERANCES			
MM	TOL	INCH	TOL
0-6	±0.25	0-.24	±.010
>6-30	±0.40	.24-1.18	±.016
>30-120	±0.50	1.18-4.76	±.020
>120	±0.80	>4.76	±.031

THIS DRAWING CONTAINS INFORMATION THAT IS PROPRIETARY TO MOLEX ELECTRONIC TECHNOLOGIES, LLC AND SHOULD NOT BE USED WITHOUT WRITTEN PERMISSION

DIMENSION UNITS: mm/INCH
SCALE: 2:1

GENERAL TOLERANCES (UNLESS SPECIFIED)

	MM	INCH
4 PLACES	±	±
3 PLACES	±	± SEE CHART
2 PLACES	± SEE CHART	± SEE CHART
1 PLACE	± SEE CHART	±
0 PLACES	±	±
ANGULAR TOL	± °	

DRAFT WHERE APPLICABLE MUST REMAIN WITHIN DIMENSIONS

CURRENT REV DESC: REMOVED OBSOLETED PART NUMBERS AS PER PCN#512132.

EC NO: 754285
DRWN: RAVINR1 2023/06/02
CHK'D: RAVINR1 2023/07/14
APPR: GGA 2023/07/18

INITIAL REVISION:
DRWN: CYORK 2004/09/27
APPR: grobertson 2004/10/01

THIRD ANGLE PROJECTION | DRAWING: B-SIZE | SERIES: 38760

molex

9.53MM [.375] DOUBLE ROW
BTS ASSEMBLY

PRODUCT CUSTOMER DRAWING

DOCUMENT NUMBER	DOC TYPE	DOC PART	REVISION
SD-38760-001	PSD	001	C3

MATERIAL NUMBER	CUSTOMER	SHEET NUMBER
SEE CHART	GENERAL MARKET	1 OF 2

DOCUMENT STATUS	P1	RELEASE DATE	2023/07/18 08:20:50

FORMAT: Eng-lega-master-tb-prod-B
REVISION: E1
DATE: 2021/05/01

NO. OF CIRCUITS "XX"	DIM. "A" mm	DIM. "A" INCH	DIM. "B" mm	DIM. "B" INCH	DIM. "C" mm	DIM. "C" INCH	DIM. "D" mm	DIM. "D" INCH	ASSEMBLY MATERIAL NO. (STANDARD)	ASSEMBLY MATERIAL NO. (-49 OPTION)	ASSEMBLY MATERIAL NO. (-50 OPTION)
2	35.7	[1.41]	9.53	[.375]	28.6	[1.13]	21.3	[.84]	387600102	387600202	387600302
3	45.2	[1.78]	19.05	[.750]	38.1	[1.50]	30.8	[1.21]	387600103	387600203	387600303
4	54.7	[2.16]	28.58	[1.125]	47.6	[1.88]	40.3	[1.59]	387600104	387600204	387600304
5	64.3	[2.53]	38.10	[1.500]	57.2	[2.25]	49.8	[1.96]	387600105	387600205	387600305
6	73.8	[2.91]	47.63	[1.875]	66.7	[2.63]	59.4	[2.34]	387600106	387600206	387600306
7	83.3	[3.28]	57.15	[2.250]	76.2	[3.00]	68.9	[2.71]	387600107	---	387600307
8	92.8	[3.66]	66.68	[2.625]	85.7	[3.38]	78.4	[3.09]	387600108	387600208	387600308
9	102.4	[4.03]	76.20	[3.000]	95.3	[3.75]	87.9	[3.46]	387600109	---	387600309
10	111.9	[4.41]	85.73	[3.375]	104.8	[4.13]	97.5	[3.84]	387600110	---	387600310
11	121.4	[4.78]	95.25	[3.750]	114.3	[4.50]	107.0	[4.21]	387600111	387600211	---
12	130.9	[5.16]	104.78	[4.125]	123.8	[4.88]	116.5	[4.59]	387600112	387600212	387600312
13	140.5	[5.53]	114.30	[4.500]	133.4	[5.25]	126.0	[4.96]	387600113	387600213	---
14	150.0	[5.91]	123.83	[4.875]	142.9	[5.63]	135.6	[5.34]	387600114	---	387600314
15	159.5	[6.28]	133.35	[5.250]	152.4	[6.00]	145.1	[5.71]	387600115	---	---
16	169.0	[6.66]	142.88	[5.625]	161.9	[6.38]	154.6	[6.09]	387600116	387600216	387600316
17	178.6	[7.03]	152.40	[6.000]	171.5	[6.75]	164.1	[6.46]	387600117	387600217	---
18	188.1	[7.41]	161.93	[6.375]	181.0	[7.13]	173.7	[6.84]	387600118	387600218	387600318
19	197.6	[7.78]	171.45	[6.750]	190.5	[7.50]	183.2	[7.21]	---	387600219	387600319
20	207.1	[8.16]	180.98	[7.125]	200.0	[7.88]	192.7	[7.59]	387600120	---	387600320
21	216.7	[8.53]	190.50	[7.500]	209.6	[8.25]	202.2	[7.96]	---	---	---
22	226.2	[8.91]	200.03	[7.875]	219.1	[8.63]	211.8	[8.34]	387600122	387600222	---
23	235.7	[9.28]	209.55	[8.250]	228.6	[9.00]	221.3	[8.71]	---	387600223	---
24	245.2	[9.66]	219.08	[8.625]	238.1	[9.38]	230.8	[9.09]	387600124	387600224	387600324
25	254.2	[10.03]	228.60	[9.000]	247.7	[9.75]	240.3	[9.46]	---	---	---
26	264.3	[10.41]	238.13	[9.375]	257.2	[10.13]	249.9	[9.84]	387600126	387600226	387600326
27	273.8	[10.78]	247.65	[9.750]	266.7	[10.50]	259.4	[10.21]	---	387600227	387600327
28	283.3	[11.16]	257.18	[10.125]	276.2	[10.88]	268.9	[10.59]	387600128	387600228	387600328
29	292.9	[11.53]	266.70	[10.500]	285.8	[11.25]	278.4	[10.96]	---	387600229	387600329
30	302.4	[11.91]	276.23	[10.875]	295.3	[11.63]	288.0	[11.34]	387600130	---	387600330

TOLERANCES			
MM	TOL	INCH	TOL
0-6	±0.25	0-.24	±.010
>6-30	±0.40	.24-1.18	±.016
>30-120	±0.50	1.18-4.76	±.020
>120	±0.80	>4.76	±.031

THIS DRAWING CONTAINS INFORMATION THAT IS PROPRIETARY TO MOLEX ELECTRONIC TECHNOLOGIES, LLC AND SHOULD NOT BE USED WITHOUT WRITTEN PERMISSION

DIMENSION UNITS: mm/INCH
SCALE: 2:1

GENERAL TOLERANCES (UNLESS SPECIFIED)

	MM	INCH
4 PLACES	±	±
3 PLACES	±	± SEE CHART
2 PLACES	± SEE CHART	± SEE CHART
1 PLACE	± SEE CHART	±
0 PLACES	±	±
ANGULAR TOL	± °	

DRAFT WHERE APPLICABLE MUST REMAIN WITHIN DIMENSIONS

CURRENT REV DESC: REMOVED OBSOLETED PART NUMBERS AS PER PCN#512132.

EC NO: 754285
DRWN: RAVINR1 2023/06/02
CHK'D: RAVINR1 2023/07/14
APPR: GGA 2023/07/18

INITIAL REVISION:
DRWN: CYORK 2004/09/27
APPR: grobertson 2004/10/01

molex

9.53MM [.375] DOUBLE ROW
BTS ASSEMBLY

PRODUCT CUSTOMER DRAWING

DOCUMENT NUMBER	DOC TYPE	DOC PART	REVISION
SD-38760-001	PSD	001	C3

THIRD ANGLE PROJECTION	DRAWING	SERIES	MATERIAL NUMBER	CUSTOMER	SHEET NUMBER
	B-SIZE	38760	SEE CHART	GENERAL MARKET	2 OF 2

DOCUMENT STATUS	P1	RELEASE DATE	2023/07/18 08:20:50

FORMAT: Eng-lega-master-tb-prod-B
REVISION: E1
DATE: 2021/05/01