COMMENT:
ALL RIGHTS ARE RESERVED BY US FOR THIS DRAWING. WITHOUT OUR PRIOR CONSENT,
IT MAY NEITHER BE DUBLICATED NOR MADE AVAILABLE TO A THIRD PARTY,
AND IT ALSO MAY NOT BE IMPROPERLY USED BY TE RECEIVER, OR A THIRD PARTY.

	Material	Surface	Screw	Washer	Spring washer	Nut	Package	Notice
			(quantity)	(quantity)	(quantity)	(quantity)		
F-GSCH1/5	Steel	zinc plated	2	4	2	2	in pairs	Packed together in a bag
F-GSCH1/5SN	Steel	tin plated	2	4	2	2	in pairs	Packed together in a bag
F-GSCH1/5S	Steel	zinc plated	max. 5000	max. 10000	max. 5000	max. 5000	bulk packed	Individually packed in bags
F-GSCH1/5SSN	Steel	tin plated	max. 5000	max. 10000	max. 5000	max. 5000	bulk packed	Individually packed in bags
F-GSCH1/5-K178	Steel	gold plated	2	4	2	2	in pairs	Packed together in a bag
F-GSCH1/5-K320	Steel	zinc plated	max. 5000	-	-	-	bulk packed	
F-GSCH1/5-K320SN	Steel	tin plated	max. 5000	-	-	-	bulk packed	
F-GSCH1/5-K498	Steel	zinc plated	2	2	-	-	in pairs	Packed together in a bag
F-GSCH1/5-K498SN	Steel	tin plated	2	2	-	-	in pairs	Packed together in a bag
F-GSCH1/5-K660	Steel	zinc plated	max. 5000	-	max. 5000	-	bulk packed	Individually packed in bags
F-GSCH1/5-K660SN	Steel	tin plated	max. 5000	-	max. 5000	-	bulk packed	Individually packed in bags
F-GSCH1/5-K940	Steel	zinc plated	2	4	2	2	in pairs	Customized printing
F-GSCH1/5SSN-K940	Steel	tin plated	2	4	2	2	in pairs	Customized printing
F-GSCH1/5-K1074	Steel	zinc plated	500	500	500	500	bulk packed	Individually packed in bags
F-GSCH1/5-K1074SN	Steel	tin plated	500	500	500	500	bulk packed	Individually packed in bags
F-GSCH1/5-K1111	Steel	zinc plated	1	2	1	1	Half set	Packed together in a bag
F-GSCH1/5-K1111SN	Steel	tin plated	1	2	1	1	Half set	Packed together in a bag

③

REV.	DATE	CH.-NO.
3	07-05-2010	22599
2	01-07-2003	2 1262
1		

Measurement without tolerance occ. to ISO 2768-m

SCALE 2:1

NAME / DATE
DRAWN Denzinger 16-04-2003
CHECKED Markus.Jobst 07-05-2010

FCT group
fctgroup.com

ORIGINAL: DIN A4-DRAWING AS A FILE

TITLE
Female Screw Lock
F-GSCH1/5

DWG.NO. F62M031_D

REV. 3

REPLACEMENT FOR:

PAGES 2

COMMENT:
ALL RIGHTS ARE RESERVED BY US FOR THIS DRAWING. WITHOUT OUR PRIOR CONSENT,
IT MAY NEITHER BE DUBLICATED NOR MADE AVAILABLE TO A THIRD PARTY,
AND IT ALSO MAY NOT BE IMPROPERLY USED BY TE RECEIVER, OR A THIRD PARTY.

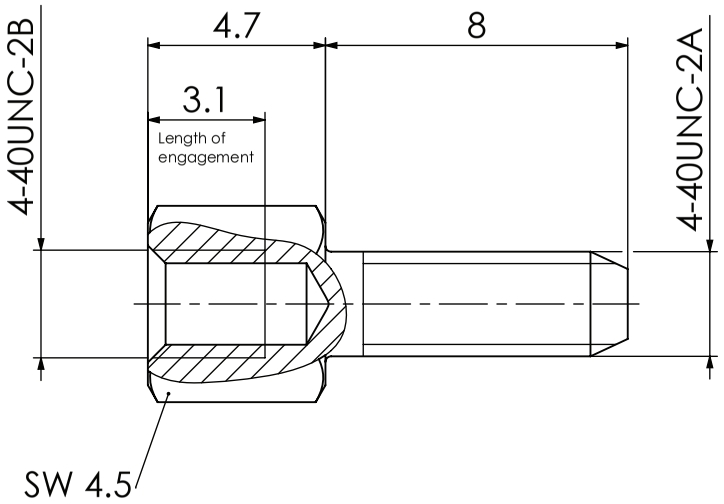

see page 2

Part No.			Material			Surface plating / Colour / Class
			Measurement without tolerance occ. to ISO 2768-m	SCALE 2:1	TITLE	Female Screw Lock F-GSCH1/5
			NAME / DATE			
			DRAWN	Denzinger 16-04-2003		
			CHECKED	Markus.Jobst 07-05-2010		
3	07-05-2010	22599	FCT group fctgroup.com		DWG.NO. F62M031_D	REV. 3
2	01-07-2003	2 1262				
1						
REV.	DATE	CH.-NO.	ORIGINAL: DIN A4-DRAWING AS A FILE		REPLACEMENT FOR:	PAGES 2