REV	ECN NO	DESRIPTION	DESIGN	APPROVAL	DATE
A1	NEW	Replace frame			2020.06.12

ROHS

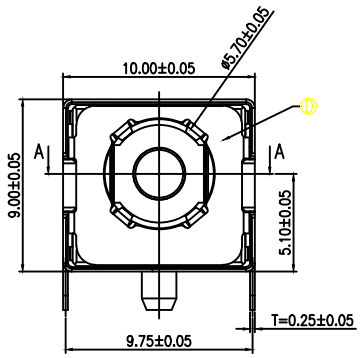

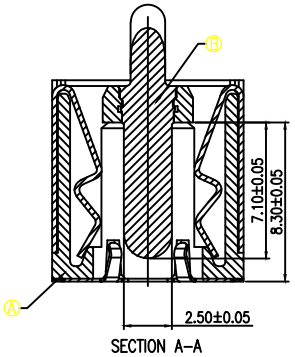

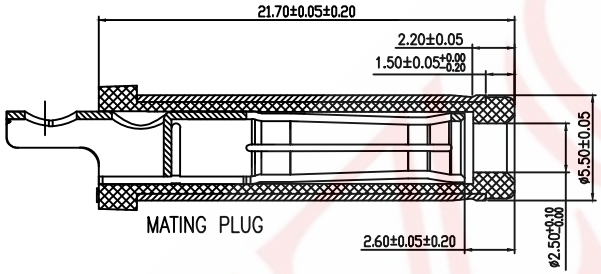

SPECIFICATION:

1. RATING: DC 30V 20A
2. CONTACT RESISTANCE:
   30mΩ MAX(INITIAL).
   50mΩ MAX(FINAL).
3. INSULATION RESISTANCE: 100 MΩ MIN.
4. WITHSTAND VOLTAGE: 500 VAC
5. INSERTION FORCE: 30N MAX.
6. EXTRACTION FORCE: 3N MIN.
7. DURABILITY: 5,000 CYCLES

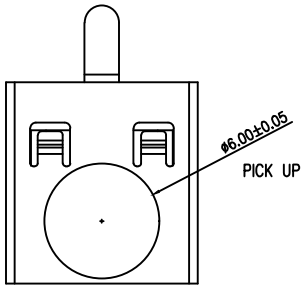

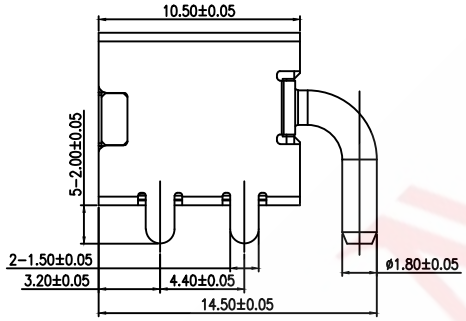

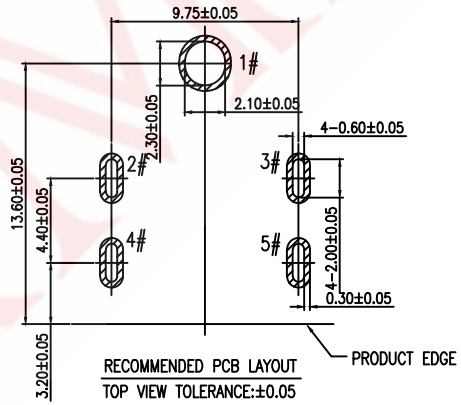

SCHEMATIC

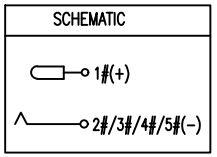

9C W 5 105 B E G A

- Model Definition
- Mould Number: MX1194
- Needle Diameter: 2.5 mm
- Fixing Method: Without Fixed Column
- Interface Method: Conventional Flared Opening
- Overall Length: 14.50 mm
- Pin Position: 5 Pin
- Mounting Method: Horizontal DIP
- Product Series: DC Power Jacks

NO.	DESCRIPTION	MATERIAL	REMARKS	QTY
D	GROUND	SUS 304		1
C	SHELL	C5210	Ni 40u" MIN.	1
B	CENTER PIN	BRASS	GOLD FLASH /Ni 40u" MIN.	1
A	HOUSING	PA10T	BLACK	1

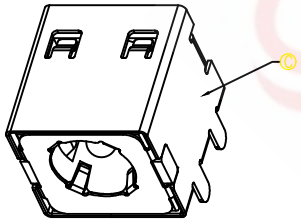

			GENERAL TOLERANCE	
			≥0~2<	±0.15
DESIGN	WANGGUIFA	2018.06.12	≥2~5<	±0.25
CHECKED	ZHENGUILAN	2018.06.12	≥0~2<	±0.15
APPROVED	LILIANJIANG	2018.06.14	≥5	±0.35

FIRST VIEW

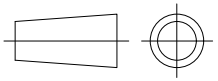

SCALE	1:1	UNIT	mm

The copyright belongs to samzo parts [China] Co., Ltd. please use the material after samzo parts agree to authorize. The final right of interpretation belongs to samzo parts.
WWW.KKK-JP.COM

SAMZO COMPONENTS
Electronic switch and connector manufacturer

TITLE:: 大电流 卧式插件 针2.5

DWG NO: 9CH2-A1194

PART NO: 9CH2-55251194

MODEL NO: 9CW5105BEGA

NAME: DC JACK