# LBW Flush Mount 22mm Switches & Pilot Lights

**Flush bezel projects only 2mm from front of panel. Removable contact blocks are ideal for single board mounting.**

## Key Features

- Pushbuttons, illuminated pushbuttons, selector switches, and key selector switches with up to 3PDT contacts.
- Key selectors with keys that are difficult to duplicate. Seven different key numbers to choose from.
- Pilot lights with round or square flat lenses.
- Solder / Tab or PC Board terminal.
- Black or metallic flush bezels available.
- Guard pushbuttons, illuminated or non-illuminated are available.
- Illuminated pushbuttons with bright, clear, ring, flush or extended lens.
- Choice of either gold-clad or silver contacts.
- Degree of protection: IP65 (from the front of the panel).

| Applicable Standards | Mark | File No. or Organization |
|---|---|---|
| UL508 | | UL Recognition No.E55996 |
| CSA 22.2 No.14 | | CSA File No. LR 21451 |
| EN60947-5-1 | | TÜV Rheinland |
| | | EU Low Voltage Directive |
| GB14048.5 | | |

## Specifications

| | | |
|---|---|---|
| Operating Temperature | | –25 to +60°C (no freezing), Illuminated units: –25 to +55°C |
| Storage Temperature | | –30 to +80°C (no freezing) |
| Operating Humidity | | 45 to 85% RH (no condensation) |
| Contact Resistance | | 50 mW maximum (initial value) |
| Insulation Resistance | | 100 MW minimum (500V DC megger) |
| Dielectric Strength | Switch | Between live part and ground: 2,000V AC, 1 min.<br>Between terminals of different poles: 2,000V AC, 1 min.<br>Between terminals of the same poles: 1,000V AC, 1 min. |
| | Illumination | Between live part and ground: 2,000V AC, 1 min. |
| Vibration Resistance | | Operating extremes/Damage limits:<br>5 to 55 Hz, amplitude 0.5mm |
| Shock Resistance | | Operating extremes: 100 $m/s^2$<br>Damage limits: 1,000 $m/s^2$ |
| Mechanical Life (minimum operations) | | Momentary: 2,000,000<br>Maintained: 250,000<br>Selector switches: 250,000<br>Key selector switches: 250,000 |
| Electrical Life (minimum operations) | | Momentary: 50,000 / 100,000 [1]<br>Maintained: 50,000 / 100,000 [2]<br>Selector switches: 50,000 / 100,000 [2]<br>Key selector switches: 50,000 / 100,000 [2] |
| Degree of Protection | | IP65 (IEC 60529) |
| Terminal Style | | Solder/tab terminal #110, PC board terminal |
| Bezel | | Black plastic or metallic |
| Weight (approx.) | | 16g (illuminated puthbutton)<br>14g (pilot light)<br>15g (pushbutton)<br>17g (selector switch)<br>29g (key switch)<br>17g (illuminated pushbutton with guard)<br>18g (push button with guard) |

1. Switching frequency 1,800 operations/h.
2. Switching frequency 1,200 operations/h.

## Contact Ratings

| Gold Contact (switch base color: blue) | | |
|---|---|---|
| Rated Insulation Voltage | 250V | |
| Rated Thermal Current | 3A | |
| Rated Operating Voltage | 30V DC | 125V AC |
| Rated Operating Current (resistive load) | 0.1A | 0.1A |
| Contact Material | Gold-clad silver | |

Minimum applicable load (reference value): 5V AC/DC, 1 mA

| Silver Contact (switch base color: gray) | | | | | |
|---|---|---|---|---|---|
| Rated Insulation Voltage | | | 250V | | |
| Rated Operating Voltage | | | 30V | 125V | 250V |
| Rated Operating Current | AC 50/60Hz | Resistive load | — | 5A | 5A |
| | | Inductive load | — | 3A | 1.5A |
| | DC | Resistive load | 5A | 1.1A | — |
| | | Inductive load | 2.5A | 0.55A | — |
| | AC 50/60Hz | Resistive load | — | 5A | 3A |
| | | Inductive load | — | 3A | 1.5A |
| | DC | Resistive load | 3A | 0.6A | — |
| | | Inductive load | 1A | 0.22A | — |
| Rated Thermal Current | | | 5A | | |
| Contact Material | | | Silver | | |

AC inductive load: PF=0.6 to 0.7 DC inductive load: L/R=7 ms max.

### LED Ratings

| | | | |
|---|---|---|---|
| Rated Voltage | 5V DC | 12V AC/DC | 24V AC/DC |
| Voltage Range | 5V DC±5% | 12V AC/DC±10% | 24V AC/DC ±10% |
| LED Part No. | LB9Z-LED5② | LB9Z-LED1② | LB9Z-LED2② |
| Rated Current | A, R: 22 mA G, PW, S: 16 mA | | |
| Voltage Rating | Marked on the side of the LED unit | | |
| LED Life (reference value) | Approx. 30,000 hours (until the brightness reduces to 50% of the initial value) | | |
| Internal Circuit | A, PW, R | A, PW, R | |
| | 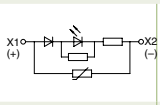 | 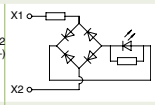 | |
| | G, S | G, S | |
| | 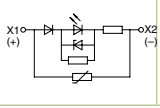 | 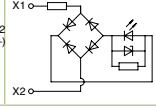 | 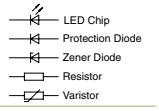 |



1. For ② (color code): A (amber), G (green), PW (white), R (red), S (blue)
2. Use the white LED for yellow illumination.
3. LED lamp contains a current-limiting resistor.

## Illuminated Pushbuttons (Assembled)

Part No. LBW①L-②③T④⑤⑥∗

**Flush**

Round / Black Bezel | Square / Black Bezel | Round / Metallic Bezel | Square / Metallic Bezel | Round with Guard | Square with Guard

**Extended**

(black bezel is also available)

**Flush Ring-illuminated**

(black bezel is also available)

| ① Style | ② Operation | ④ Contact | ⑤ LED Operating Voltage | Part No. | ∗ Illumination Color Code |
|---|---|---|---|---|---|
| Black bezel | Momentary | Gold/SPDT | 24V AC/DC | LBW①L-M③T14* | Specify the color code in place of ∗ in the Part No.<br>A: amber<br>G: green<br>PW: pure white<br>R: red<br>S: blue<br>Y: yellow |
| | | Gold/DPDT | | LBW①L-M③T24* | |
| | Maintained | Gold/SPDT | 24V AC/DC | LBW①L-A③T14* | |
| | | Gold/DPDT | | LBW①L-A③T24* | |
| Metallic bezel | Momentary | Gold/SPDT | 24V AC/DC | LBW①L-M③T14* | |
| | | Gold/DPDT | | LBW①L-M③T24* | |
| | Maintained | Gold/SPDT | 24V AC/DC | LBW①L-A③T14* | |
| | | Gold/DPDT | | LBW①L-A③T24* | |
| Guard Type | Momentary | Gold/SPDT | 24V AC/DC | LBW①L-M③T14* | |
| | | Gold/DPDT | | LBW①L-M③T24* | |
| | Maintained | Gold/SPDT | 24V AC/DC | LBW①L-A③T14* | |
| | | Gold/DPDT | | LBW①L-A③T24* | |

- Flush/Extended color code: A (amber), G (green), PW (pure white), R (red), S (blue), Y (yellow)
- Ring-illuminated color code: PW (pure white), WA (amber), WG (green), WR (red), WS (blue)
- Illuminated pushbuttons contain an LED unit. For details on LED units, see 580.
- The guard opens 180 degrees spring-return.
- Illuminated pushbuttons can be used with legend markings. Engraving can be done on a marking plate which is placed in the lens, or a clear film can be printed and placed in the lens. See 594 for details on the marking plate and film.
- White lens type (when light is off) are available. Clear lens is used instead of colored lens for amber, green, red, and blue illuminated pushbuttons. Amber, green, red, or blue LED units are used. To specify, see Part Number Interpretation below.
- PC board terminals available for gold contacts. Silver contacts also available. To specify, see Part Number Interpretation below.
- Extended style is available. See Part Number Interpretation below (③).
- Flush ring-illuminated style is available. See Part Number Interpretation below (③). Guard is not available with flush ring-illuminated style.
- 5V DC and 12V AC/DC LED operating voltages also available.
- Marking plates are available. See accessory section.

### Part Number Interpretation

LBW①L-②③T④⑤⑥∗

To be used for interpreting part numbers only, not for part number development.

#### ① Style

| Code | Shape |
|---|---|
| 6 | Round / Black Bezel |
| 7 | Square / Black Bezel |
| 6M | Round / Metallic Bezel |
| 7M | Square / Metallic Bezel |
| 6G | Round with Guard |
| 7G | Square with Guard |

#### ② Operation

| Code | Operation |
|---|---|
| A | Maintained |
| M | Momentary |

#### ③ Operator Style

| Code | Operator Style |
|---|---|
| 1 | Flush |
| 2 | Extended |
| 1R | Flush Ring-illuminated |

* Extended style is available only for round (black/metallic bezel) and in momentary operation. Guard model is not available.

#### ④ Contacts

| Code | Contact |
|---|---|
| 1 | Gold/SPDT |
| 2 | Gold/DPDT |
| 5 | Silver/SPDT |
| 6 | Silver/DPDT |

#### ⑤ LED Operating Voltage

| Code | Rated Operating Voltage |
|---|---|
| 1 | 5V DC |
| 3 | 12V AC/DC |
| 4 | 24V AC/DC |

#### ⑥ Others

| Code | Specification | Part No. Example |
|---|---|---|
| Blank | Solder/Tab Terminal | — |
| V | PC Board Terminal (Gold Contact Only) | LBW6L-M1T14V∗ |

- Specify the color code in place of ∗ in the table above.

## Illuminated Pushbuttons (Sub-assembled)

| Contact Block | | Operator | | LED Module | | Lens | | Completed Unit |
|---|---|---|---|---|---|---|---|---|
| | + | | + | | + | | = | |

### Contact Block

| Terminal Style | | Material | Contact | Part Number |
|---|---|---|---|---|
| | Solder/Tab | Silver | SPDT | LB-T50 |
| | | | DPDT | LB-T60 |
| | PCB | Gold | SPDT | LB-T10V |
| | | | DPDT | LB-T20V |

### LED Module

| Style | Color | Voltage | Part Number |
|---|---|---|---|
| | Amber | 5V | LB9Z-LED5A |
| | | 12V | LB9Z-LED1A |
| | | 24V | LB9Z-LED2A |
| | Green | 5V | LB9Z-LED5G |
| | | 12V | LB9Z-LED1G |
| | | 24V | LB9Z-LED2G |
| | Red | 5V | LB9Z-LED5R |
| | | 12V | LB9Z-LED1R |
| | | 24V | LB9Z-LED2R |
| | Blue | 5V | LB9Z-LED5S |
| | | 12V | LB9Z-LED1S |
| | | 24V | LB9Z-LED2S |
| | Pure White | 5V | LB9Z-LED5PW |
| | | 12V | LB9Z-LED1PW |
| | | 24V | LB9Z-LED2PW |

### Operator

| Style | Mounting Style | Shape | Momentary | Maintained |
|---|---|---|---|---|
| | Flush Mount (Plastic) | Round | LBW6L-M0 | LBW6L-A0 |
| | | Square | LBW7L-M0 | LBW7L-A0 |
| | Flush Mount (Metallic) | Round | LBW6ML-M0 | LBW6ML-A0 |
| | | Square | LBW7ML-M0 | LBW7ML-A0 |
| | Flush Mount (Built-in switch guard) | Round | LBW6GL-M0 | LBW6GL-A0 |
| | | Square | LBW7GL-M0 | LBW7GL-A0 |
| | Flush Mount (Plastic) | Round (for extended lens) | LBW6L-M20 | LBW6L-A20 |
| | Flush Mount (Metallic) | | LBW6ML-M20 | LBW6ML-A20 |

### Lens

| Shape | Color | Part Number |
|---|---|---|
| Round (Flush) | Amber | LBW6A-L1A |
| | Green | LBW6A-L1G |
| | Red | LBW6A-L1R |
| | Blue | LBW6A-L1S |
| | White | LBW6A-L1W |
| | Yellow | LBW6A-L1Y |
| Round (Extended) | Amber | LBW6A-L2A |
| | Green | LBW6A-L2G |
| | Red | LBW6A-L2R |
| | Blue | LBW6A-L2S |
| | White | LBW6A-L2W |
| | Yellow | LBW6A-L2Y |
| Square (Flush) | Amber | LBW7A-L1A |
| | Green | LBW7A-L1G |
| | Red | LBW7A-L1R |
| | Blue | LBW7A-L1S |
| | White | LBW7A-L1W |
| | Yellow | LBW7A-L1Y |
| Round Ring Flush | White | LBW6A-L1R-W |
| Square Ring Flush | White | LBW7A-L1R-W |

Note: No marking plate used in ring illuminated pushbottons.

## Dimensions

All dimensions in mm.

### Flush/Ring-illuminated

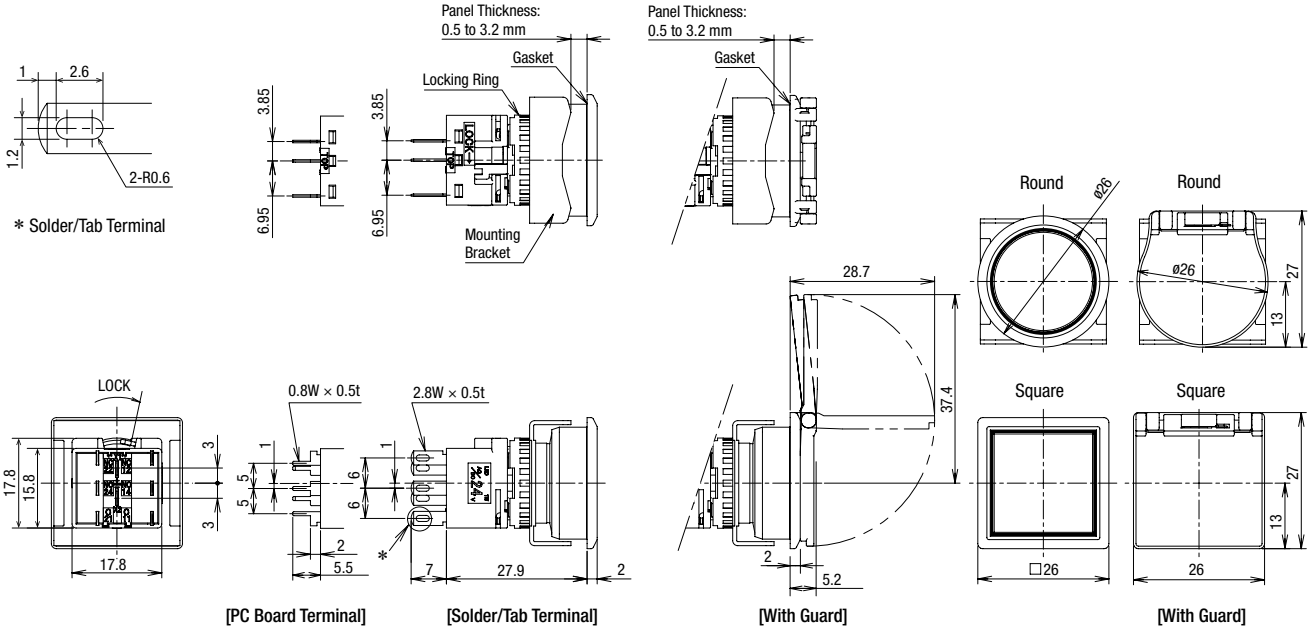


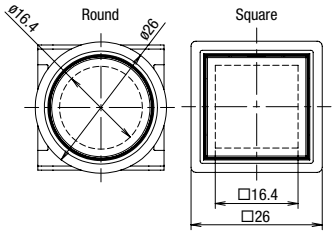


Ring-illuminated

### Extended

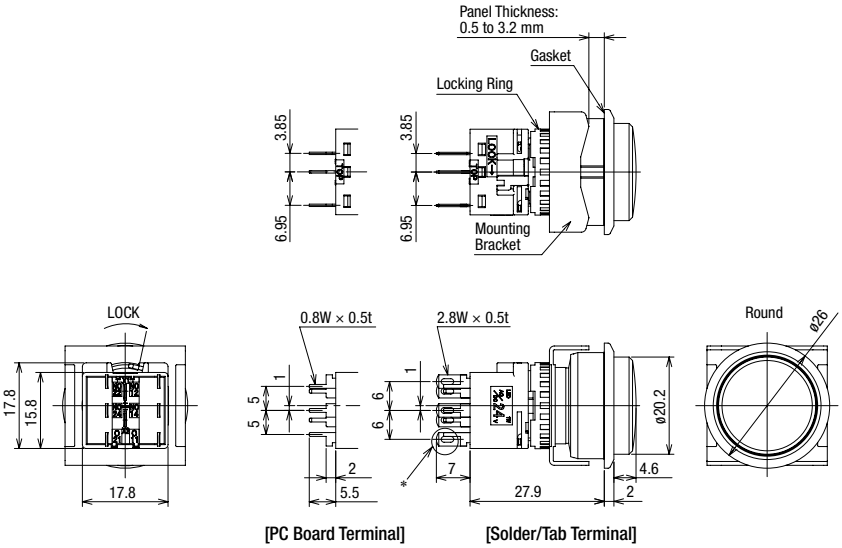


### Terminal Arrangement (Bottom View)

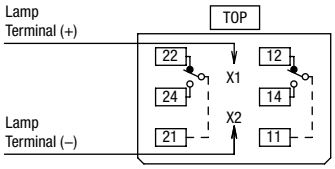


(SPDT contacts on the right only)

- For details on pc board and circuit design, see 594.
- For details on single board mounting, see 593.

## Pilot Lights

| Part No. | LBW①P-1T0②③∗ |
|---|---|

Round / Black Bezel

Square / Black Bezel

Round / Metallic Bezel

Square / Metallic Bezel

| ① Style | ③ LED Operating Voltage | Part No. | ∗ Illumination Color Code |
|---|---|---|---|
| Black Bezel | 24V AC/DC | **LBW①P-1T04∗** | Specify the color code in place of ∗ in the Part No.<br>A: amber<br>G: green<br>PW: pure white<br>R: red<br>S: blue<br>Y: yellow |
| Metallic Bezel | 24V AC/DC | **LBW①P-1T04∗** | |

- Pilot lights contain an LED unit. For maintenance LED units see 583.
- Legends and symbols can be engraved on a marking plate or film to be inserted under the lens by users for labelling purposes. See 596 for details.
- White lens type (when light is off) are available. Clear lens is used instead of colored lens for amber, green, red, and blue pilot lights. Amber, green, red, or blue LED units are used. To specify, see Part Number Interpretation below.
- PC board terminals available. To specify, see Part Number Interpretation below.
- 5V DC and 12V AC/DC LED operating voltages also available.

### Part Number Interpretation

**LBW①P-1T0②③∗**

To be used for interpreting part numbers only, not for part number development.

**① Style**

| Code | Shape |
|---|---|
| 6 | Round / Black Bezel |
| 7 | Square / Black Bezel |
| 6M | Round / Metallic Bezel |
| 7M | Square / Metallic Bezel |

**② LED Operating Voltage**

| Code | Rated Operating Voltage |
|---|---|
| 1 | 5V DC |
| 3 | 12V AC/DC |
| 4 | 24V AC/DC |

**③ Others**

| Code | Specification | Part No. Example |
|---|---|---|
| Blank | Solder/Tab Terminal | — |
| V | PC Board Terminal | LBW6P-1T04V∗ |

- Specify the color code in place of ∗ in the table above.

## Pilot Lights (Sub-assembled)

| Contact Block | | Operator | | LED Module | | Lens | | Completed Unit |
|---|---|---|---|---|---|---|---|---|
| | + | | + | | + | | = | |

### Contact Block

| Terminal Style | | Part Number |
|---|---|---|
| | Solder Tab | LB-T00 |
| | PCB | LB-T00V |

### LED Module

| Style | Color | Voltage | Part Number |
|---|---|---|---|
| | Amber | 5V | LB9Z-LED5A |
| | | 12V | LB9Z-LED1A |
| | | 24V | LB9Z-LED2A |
| | Green | 5V | LB9Z-LED5G |
| | | 12V | LB9Z-LED1G |
| | | 24V | LB9Z-LED2G |
| | Red | 5V | LB9Z-LED5R |
| | | 12V | LB9Z-LED1R |
| | | 24V | LB9Z-LED2R |
| | Blue | 5V | LB9Z-LED5S |
| | | 12V | LB9Z-LED1S |
| | | 24V | LB9Z-LED2S |
| | Pure White | 5V | LB9Z-LED5PW |
| | | 12V | LB9Z-LED1PW |
| | | 24V | LB9Z-LED2PW |

### Operator

| Style | Mounting Style | Shape | Part Number |
|---|---|---|---|
| | Flush Mount (Plastic) | Round | LBW6P-0 |
| | | Square | LBW7P-0 |
| | Flush Mount (Metallic) | Round | LBW6MP-0 |
| | | Square | LBW7MP-0 |

### Lens

| Shape | Color | Part Number |
|---|---|---|
| Round | Amber | LBW6A-P1A |
| | Green | LBW6A-P1G |
| | Red | LBW6A-P1R |
| | Blue | LBW6A-P1S |
| | White | LBW6A-P1W |
| | Yellow | LBW6A-P1Y |
| Square | Amber | LBW7A-P1A |
| | Green | LBW7A-P1G |
| | Red | LBW7A-P1R |
| | Blue | LBW7A-P1S |
| | White | LBW7A-P1W |
| | Yellow | LBW7A-P1Y |

## Dimensions

All dimensions in mm.

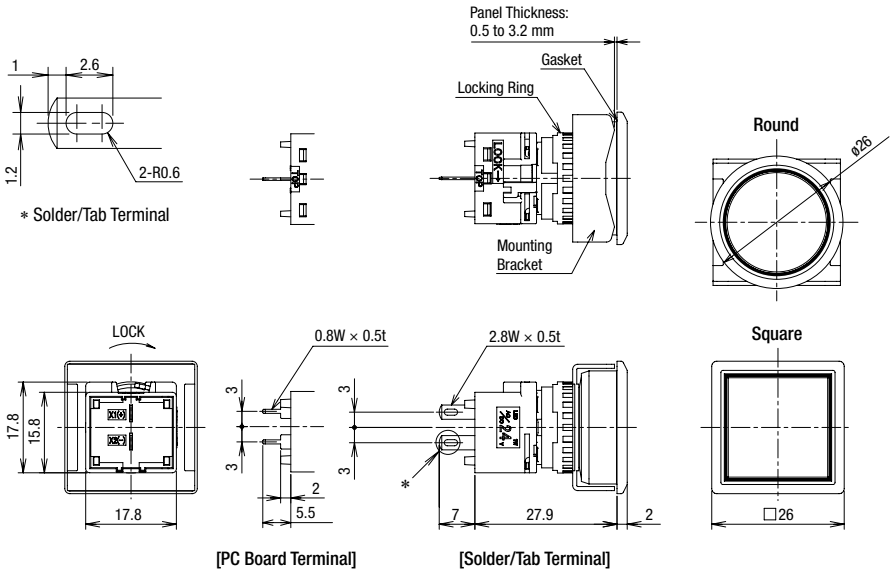


### Terminal Arrangement (Bottom View)

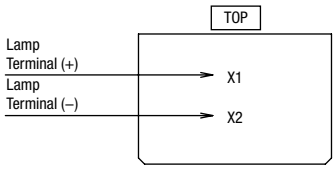

## Pushbuttons

Part No. LBW①B-②③T④⑤∗

**Flush**

Round / Black Bezel

Square / Black Bezel

Round / Metallic Bezel

Square / Metallic Bezel

Round with Guard

Square with Guard

**Extended**

Round only (metallic bezel available)

| ① Style | ② Operation | ③ Button Shape | Part No. | ∗ Illumination Color Code |
|---|---|---|---|---|
| Black bezel | Momentary | Flush Round | LBW6B-M1T1④⑤ | Specify the color code in place of * in the Part No.<br>B: black<br>G: green<br>R: red<br>S: blue<br>W: white<br>Y: yellow |
| | | Flush Square | LBW7B-M1T1④⑤ | |
| | | Extended Round | LBW6B-M1T2④⑤ | |
| | Maintained | Flush Round | LBW6B-A1T1④⑤ | |
| | | Flush Square | LBW7B-A1T1④⑤ | |
| | | Extended Round | LBW6B-A1T2④⑤ | |
| Metallic bezel | Momentary | Flush Round | LBW6MB-M1T1④⑤ | |
| | | Flush Square | LBW7MB-M1T1④⑤ | |
| | | Extended Round | LBW6MB-M1T2④⑤ | |
| | Maintained | Flush Round | LBW6MB-A1T1④⑤ | |
| | | Flush Square | LBW7MB-A1T1④⑤ | |
| | | Extended Round | LBW6MB-A1T2④⑤ | |
| Guard Type | Momentary | Flush Round | LBW6GB-M1T1④⑤ | |
| | | Flush Square | LBW7GB-M1T1④⑤ | |
| | Maintained | Flush Round | LBW6GB-A1T1④⑤ | |
| | | Flush Square | LBW7GB-A1T1④⑤ | |

- The guard opens 180 degrees spring-return.
- PC board terminals available for gold contacts. To specify, see Part Number Interpretation below.
- Pushbuttons can be used with legend markings engraved on marking plates and lens buttons with clear film inserted in the lens is available. To specify, see Part Number Interpretation below. See  for details on the marking plate and film.
- Extended pushbuttons available. To specify, see Part Number Interpretation below. Pushbuttons with guard is not available.
  Extended pushbuttons is available with momentary operation only.

### Part Number Interpretation

LBW①B-②③T④⑤∗

To be used for interpreting part numbers only, not for part number development.

**① Style**

| Code | Shape |
|---|---|
| 6 | Round / Black Bezel |
| 7 | Square / Black Bezel |
| 6M | Round / Metallic Bezel |
| 7M | Square / Metallic Bezel |
| 6G | Round with Guard |
| 7G | Square with Guard |

**② Operation**

| Code | Operation |
|---|---|
| A | Maintained |
| M | Momentary |

**③ Operator Style**

| Code | Operation |
|---|---|
| 1 | Flush |
| 2 | Extended * |

* Extended style is available only for round (black/metallic bezel) and in momentary operation. Guard model is not available.

**④ Contacts**

| Code | Contact | Code | Contact |
|---|---|---|---|
| 1 | Gold/SPDT | 5 | Silver/SPDT |
| 2 | Gold/DPDT | 6 | Silver/DPDT |
| 3 | Gold/3PDT | 7 | Silver/3PDT |

**⑤ Others**

| Code | Specification | Part No. Example |
|---|---|---|
| Blank | Solder/Tab Terminal | — |
| L (Note 1) | Lens | LBW6B-M1T1L∗ |
| V | PC Board Terminal (Gold Contact Only) | LBW6B-M1T1V∗ |
| VL (Note 1) | PC Board Terminal with Lens (Gold Contact Only) | LBW6B-M1T1VL∗ |

Note 1: Codes L and VL are available with flush operator only.

- Color code (∗) for lens:
  A (amber), B (translucent lens with black nameplate), G (green), R (red), S (blue), W (white), Y (yellow)

## Pushbuttons (Sub-assembled)

| Contact Block | | Operator | | Button | | Completed Unit |
|---|---|---|---|---|---|---|

### Contact Block

| Terminal Style | | Material | Contact | Part Number |
|---|---|---|---|---|
| | Solder/Tab | Silver | SPDT | LB-T5 |
| | | | DPDT | LB-T6 |
| | | | 3PDT | LB-T7 |
| | PCB | Gold | SPDT | LB-T1V |
| | | | DPDT | LB-T2V |
| | | | 3PDT | LB-T3V |

### Button

| Style | | Color | Part Number |
|---|---|---|---|
| | Round Flush | Black | LBW6A-B1B |
| | | Green | LBW6A-B1G |
| | | Red | LBW6A-B1R |
| | | Blue | LBW6A-B1S |
| | | White | LBW6A-B1W |
| | | Yellow | LBW6A-B1Y |
| | Round (Extended) | Black | LBW6A-B2B |
| | | Green | LBW6A-B2G |
| | | Red | LBW6A-B2R |
| | | Blue | LBW6A-B2S |
| | | White | LBW6A-B2W |
| | | Yellow | LBW6A-B2Y |
| | Square Flush | Black | LBW7A-B1B |
| | | Green | LBW7A-B1G |
| | | Red | LBW7A-B1R |
| | | Blue | LBW7A-B1S |
| | | White | LBW7A-B1W |
| | | Yellow | LBW7A-B1Y |

### Operator

| Style | Bezel Style | Shape | Momentary | Maintained |
|---|---|---|---|---|
| | Black plastic bezel | Round | LBW6L-M0 | LBW6L-A0 |
| | | Square | LBW7L-M0 | LBW7L-A0 |
| | Metallic bezel | Round | LBW6ML-M0 | LBW6ML-A0 |
| | | Square | LBW7ML-M0 | LBW7ML-A0 |
| | Plastic bezel with built-in switch guard | Round | LBW6GL-M0 | LBW6GL-A0 |
| | | Square | LBW7GL-M0 | LBW7GL-A0 |
| | Flush Mount (Plastic) | Round (for extended lens) | LBW6L-M20 | LBW6L-A20 |
| | Flush Mount (Metallic) | | LBW6ML-M20 | LBW6ML-A20 |

## Dimensions

All dimensions in mm.

### Flush Pushbutton

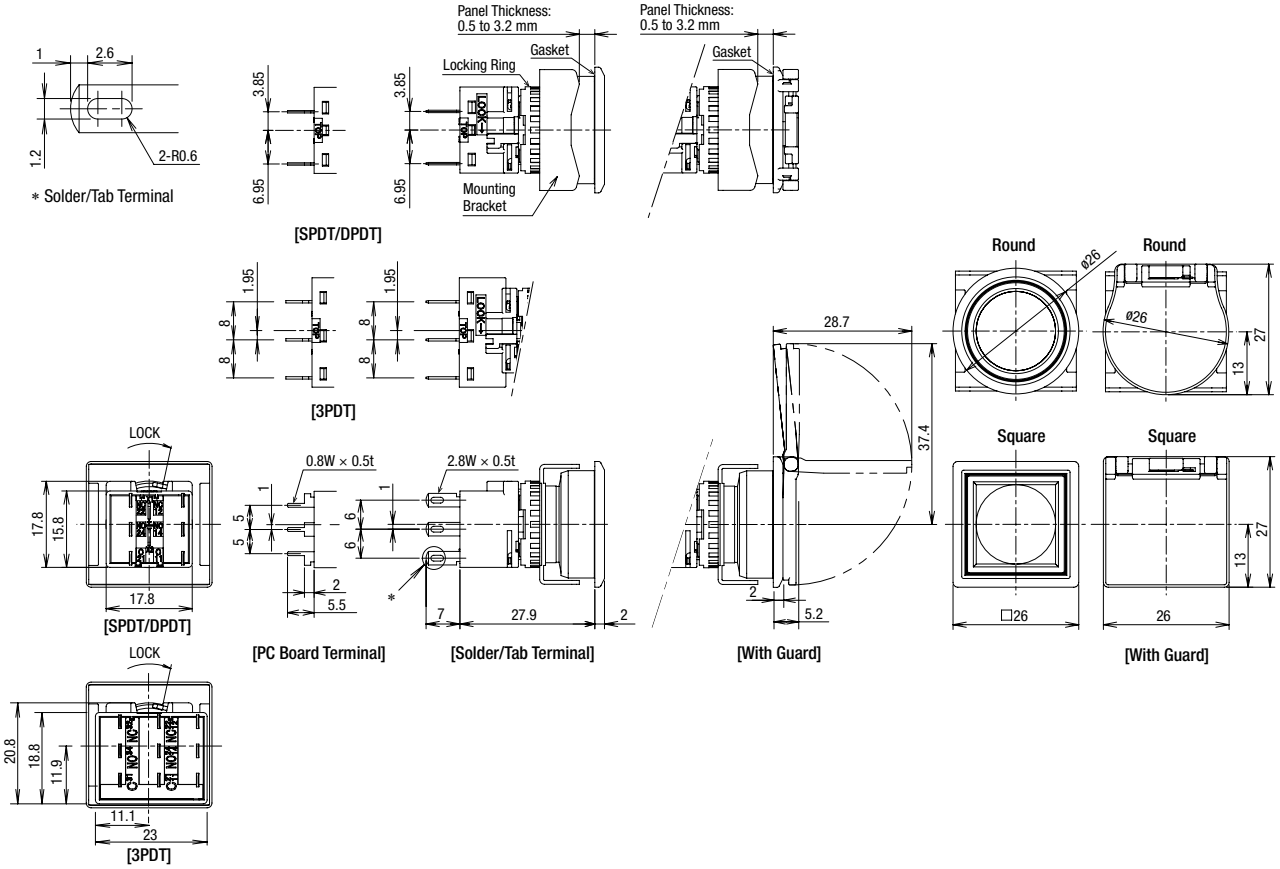


### Extended Pushbutton

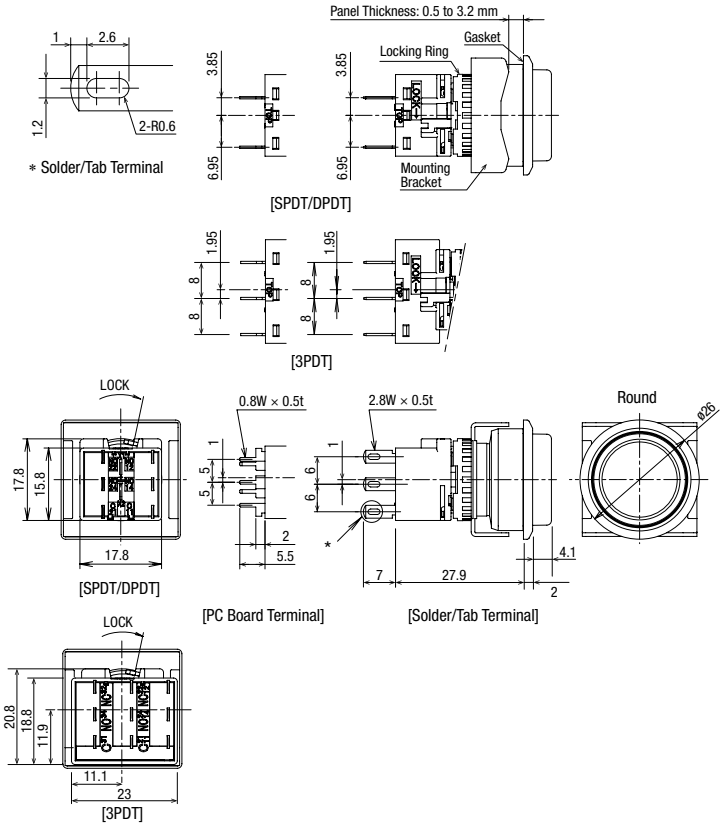


### Terminal Arrangement (Bottom View)

#### SPDT/DPDT Contacts

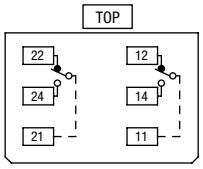


(SPDT contacts on the right only)

#### 3PDT Contacts

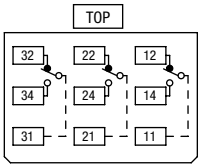


- For details on mounting hole layout, see **593**.
- For details on pc board and circuit design, see **594**.
- For details on single board mounting, see **593**.

## Selector Switches

Part No. LBW①S-②T③④

Round / Black Bezel

Square / Black Bezel

Round / Metallic Bezel

Square / Metallic Bezel

| ① Style | ② Operator Position | | | ③ Contact | Part No. Gold Contact | Part No. Silver Contact |
|---|---|---|---|---|---|---|
| Black bezel | 90° 2-position | Maintained | L R | SPDT | **LBW①S-2T1** | **LBW①S-2T5** |
| | | | | DPDT | **LBW①S-2T2** | **LBW①S-2T6** |
| | | | | 3PDT | **LBW①S-2T3** | **LBW①S-2T7** |
| | 45° 3-position | Maintained | L C R | DPDT | **LBW①S-3T2** | **LBW①S-3T6** |
| | | | | 3PDT | **LBW①S-3T3** | **LBW①S-3T7** |
| | | Spring return two-way | L C R | DPDT | **LBW①S-33T2** | **LBW①S-33T6** |
| | | | | 3PDT | **LBW①S-33T3** | **LBW①S-33T7** |
| Metallic bezel | 90° 2-position | Maintained | L R | SPDT | **LBW①S-2T1** | **LBW①S-2T5** |
| | | | | DPDT | **LBW①S-2T2** | **LBW①S-2T6** |
| | | | | 3PDT | **LBW①S-2T3** | **LBW①S-2T7** |
| | 45° 3-position | Maintained | L C R | DPDT | **LBW①S-3T2** | **LBW①S-3T6** |
| | | | | 3PDT | **LBW①S-3T3** | **LBW①S-3T7** |
| | | Spring return two-way | L C R | DPDT | **LBW①S-33T2** | **LBW①S-33T6** |
| | | | | DPDT | **LBW①S-33T3** | **LBW①S-33T7** |

- PC board terminals available for gold contacts. To specify, see Part Number Interpretation below.
- For contact operation, see 556.

### Part Number Interpretation

LBW①S-②T③④

To be used for interpreting part numbers only, not for part number development.

#### ① Style

| Code | Shape |
|---|---|
| 6 | Round / Black Bezel |
| 7 | Square / Black Bezel |
| 6M | Round / Metallic Bezel |
| 7M | Square / Metallic Bezel |

#### ② Operator Position

2-position

| Operator Position |
|---|
| **2** Maintained |

3-position

| Operator Position | |
|---|---|
| **3** Maintained | **33** Spring return two-way |

#### ③ Contacts

| Code | Contact |
|---|---|
| 1 | Gold/SPDT (90° 2-position only) |
| 2 | Gold/DPDT |
| 3 | Gold/3PDT |
| 5 | Silver/SPDT (90° 2-position only) |
| 6 | Silver/DPDT |
| 7 | Silver/3PDT |

#### ④ Others

| Code | Specification | Part No. Example |
|---|---|---|
| Blank | Solder/Tab Terminal | — |
| V | PC Board Terminal (Gold Contact Only) | LBW6S-2T1V |

## Selector Switches (Sub-assembled)

| Contact Block | | Operator | | Completed Unit |
|---|---|---|---|---|
| | + | | = | |

### Contact Block

| Terminal Style | | Material | Contact | Part Number |
|---|---|---|---|---|
| | Solder/Tab | Silver | SPDT | LB-T5 |
| | | | DPDT | LB-T6 |
| | | | 3PDT | LB-T7 |
| | PCB | Gold | SPDT | LB-T1V |
| | | | DPDT | LB-T2V |
| | | | 3PDT | LB-T3V |

SPDT contacts applicable for 2-position switches only.

### Operator

| Style | Shape | Position | Function | Part Number |
|---|---|---|---|---|
| Flush Mount (Plastic) Round | Round | 2 | Maintained | LBW6S-2Y |
| | | 3 | Maintained | LBW6S-3Y |
| | | | Spring from both | LBW6S-33Y |
| Square | Square | 2 | Maintained | LBW7S-2Y |
| | | 3 | Maintained | LBW7S-3Y |
| | | | Spring from both | LBW7S-33Y |
| Flush Mount (Metallic) Round | Round | 2 | Maintained | LBW6MS-2Y |
| | | 3 | Maintained | LBW6MS-3Y |
| | | | Spring from both | LBW6MS-33Y |
| Square | Square | 2 | Maintained | LBW7MS-2Y |
| | | 3 | Maintained | LBW7MS-3Y |
| | | | Spring from both | LBW7MS-33Y |

# Key Selector Switches

| Part No. | LBW①K-②③T④⑤-⑥ |
|---|---|

**Wave Key**

Round / Black Bezel

Square / Black Bezel

Round / Metallic Bezel

Square / Metallic Bezel

**Disc Tumbler Key**

Round /Metallic Bezel

Square / Metallic Bezel

| ① Style | ② Operator Position | | ⑤ Key Removable Position | | ⑤ Contact | Part No. Gold Contact | Part No. Silver Contact |
|---|---|---|---|---|---|---|---|
| Black bezel | 90° 2-position | Maintained | A: Key removable in all positions | Ⓛ Ⓡ | SPDT | **LBW①K-2ST1A** | **LBW①K-2ST5A** |
| | | | | | DPDT | **LBW①K-2ST2A** | **LBW①K-2ST6A** |
| | | | | | 3PDT | **LBW①K-2ST3A** | **LBW①K-2ST7A** |
| | 45° 3-position | Maintained | A: Key removable in all positions | Ⓛ Ⓒ Ⓡ | DPDT | **LBW①K-3ST2A** | **LBW①K-3ST6A** |
| | | | | | 3PDT | **LBW①K-3ST3A** | **LBW①K-3ST7A** |
| Metallic bezel | 90° 2-position | Maintained | A: Key removable in all positions | Ⓛ Ⓡ | SPDT | **LBW①K-2ST1A** | **LBW①K-2ST5A** |
| | | | | | DPDT | **LBW①K-2ST2A** | **LBW①K-2ST6A** |
| | | | | | 3PDT | **LBW①K-2ST3A** | **LBW①K-2ST7A** |
| | 45° 3-position | Maintained | A: Key removable in all positions | Ⓛ Ⓒ Ⓡ | DPDT | **LBW①K-3ST2A** | **LBW①K-3ST6A** |
| | | | | | 3PDT | **LBW①K-3ST3A** | **LBW①K-3ST7A** |

- For operator position, see Part Number Interpretation below.
- For key removable position. see Part Number Interpretation below. The key cannot be removed in a spring returned position.
- Two keys are supplied.
- Besides the standard key (key number 0H), six other keys are available.
- Disc tumbler keys also available. Only the standard key is available. To specify, see Part Number Interpretation below.
- PC board terminals available for gold contacts. To specify, see Part Number Interpretation below.
- For contact operation, see 593.

## Part Number Interpretation

LBW①K-②③T④⑤-⑥

To be used for interpreting part numbers only, not for part number development.

### ① Style

| Code | Shape |
|---|---|
| 6 | Round / Black Bezel |
| 7 | Square / Black Bezel |
| 6M | Round / Metallic Bezel |
| 7M | Square / Metallic Bezel |

### ② Operator Position

| Code | Operator Position |
|---|---|
| 2 | 90° 2-position maintained |
| 3 | 45° 3-position maintained |
| 33 | 45°-3-position spring return two-way |

### ③ Key Style

| Code | Key Style |
|---|---|
| S | Wave key |
| Blank | Disc tumbler key |

### ④ Contacts

| Code | Contact |
|---|---|
| 1 | Gold/SPDT (90° 2-position only) |
| 2 | Gold/DPDT |
| 3 | Gold/3PDT |
| 5 | Silver/SPDT (90° 2-position only) |
| 6 | Silver/DPDT |
| 7 | Silver/3PDT |

### ⑤ Key Removal Position

2-position

| Key Removable Position | |
|---|---|
| **A**: Key removable in all positions | **B**: Key removable at left position only |
| Ⓛ Ⓡ | Ⓛ ❽ |

3-position

| Key Removable Position | |
|---|---|
| **A**: Key removable in all positions | **D**: Key removable at center only |
| Ⓛ Ⓒ Ⓡ | ❶ Ⓒ ❽ |

3-position

| Spring return two-way |
|---|
| ❶ C ❽ |

- Key removable at Ⓛ, Ⓒ, Ⓡ. Key retained at ❶, ❽.

### ⑥ Key Number (for wave keys only)

| Code | |
|---|---|
| 0H or Blank | Standard key |
| 1H to 2H | Reversible key |
| 3H to 6H | Non-reversible key |

### Others

| Code | Specification | Part No. Example |
|---|---|---|
| Blank | Solder/Tab Terminal | — |
| V | PC Board Terminal (Gold Contact Only) | LBW6K-2T1VA |

## Key Selector Switches (Sub-assembled)

| Contact Block | | Operator | | Completed Unit |
|---|---|---|---|---|

### Contact Block

| Terminal Style | | Material | Contact | Part Number |
|---|---|---|---|---|
| | Solder/Tab | Silver | SPDT | LB-T5 |
| | | | DPDT | LB-T6 |
| | | | 3PDT | LB-T7 |
| | PCB | Gold | SPDT | LB-T1V |
| | | | DPDT | LB-T2V |
| | | | 3PDT | LB-T3V |

### Operator

| Style | Shape | Position | Function | Key Style | Key Remove Position | Part number |
|---|---|---|---|---|---|---|
| Black Plastic bezel | Round | 2 | 90° 2-position maintained | Disc tumbler key | All positions | LBW6K-2A |
| | | | | | Left | LBW6K-2B |
| | | | | Wave key | All positions | LBW6K-2SA |
| | | | | | Left | LBW6K-2SB |
| | | 3 | 45° 3-position maintained | Disc tumbler key | All positions | LBW6K-3A |
| | | | | | Center | LBW6K-3D |
| | | | | Wave key | All positions | LBW6K-3SA |
| | | | | | Center | LBW6K-3SD |
| | | | 45°-3-position spring return two-way | Disc tumbler key | All positions | LBW6K-33D |
| | | | | Wave key | Center | LBW6K-33SD |
| | Square | 2 | 90° 2-position maintained | Disc tumbler key | All positions | LBW7K-2A |
| | | | | | Left | LBW7K-2B |
| | | | | Wave key | All positions | LBW7K-2SA |
| | | | | | Left | LBW7K-2SB |
| | | 3 | 45° 3-position maintained | Disc tumbler key | All positions | LBW7K-3A |
| | | | | | Center | LBW7K-3D |
| | | | | Wave key | All positions | LBW7K-3SA |
| | | | | | Center | LBW7K-3SD |
| | | | 45°-3-position spring return two-way | Disc tumbler key | Center | LBW7K-33D |
| | | | | Wave key | | LBW7K-33SD |

| Style | Shape | Position | Function | Key Style | Key Remove Position | Part number |
|---|---|---|---|---|---|---|
| Metallic Bezel | Round | 2 | 90° 2-position maintained | Disc tumbler key | All positions | LBW6MK-2A |
| | | | | | Left | LBW6MK-2B |
| | | | | Wave key | All positions | LBW6MK-2SA |
| | | | | | Left | LBW6MK-2SB |
| | | 3 | 45° 3-position maintained | Disc tumbler key | All positions | LBW6MK-3A |
| | | | | | Center | LBW6MK-3D |
| | | | | Wave key | All positions | LBW6MK-3SA |
| | | | | | Center | LBW6MK-3SD |
| | | | 45°-3-position spring return two-way | Disc tumbler key | Center | LBW6MK-33D |
| | | | | Wave key | | LBW6MK-33SD |
| | Square | 2 | 90° 2-position maintained | Disc tumbler key | All positions | LBW7MK-2A |
| | | | | | Left | LBW7MK-2B |
| | | | | Wave key | All positions | LBW7MK-2SA |
| | | | | | Left | LBW7MK-2SB |
| | | 3 | 45° 3-position maintained | Disc tumbler key | All positions | LBW7MK-3A |
| | | | | | Center | LBW7MK-3D |
| | | | | Wave key | All positions | LBW7MK-3SA |
| | | | | | Center | LBW7MK-3SD |
| | | | 45°-3-position spring return two-way | Disc tumbler key | Center | LBW7MK-33D |
| | | | | Wave key | | LBW7MK-33SD |

## Dimensions

All dimensions in mm.

### Key Selector Switches with Wave Key

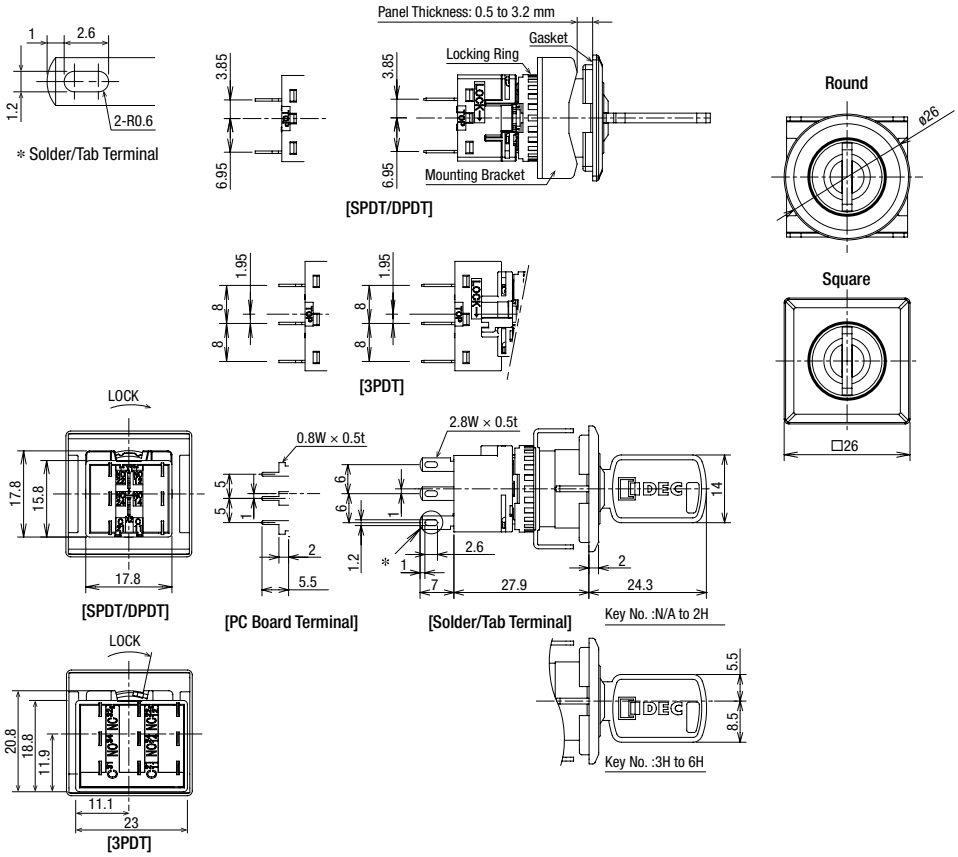


### Key Selector Switches with Disc Tumbler Key

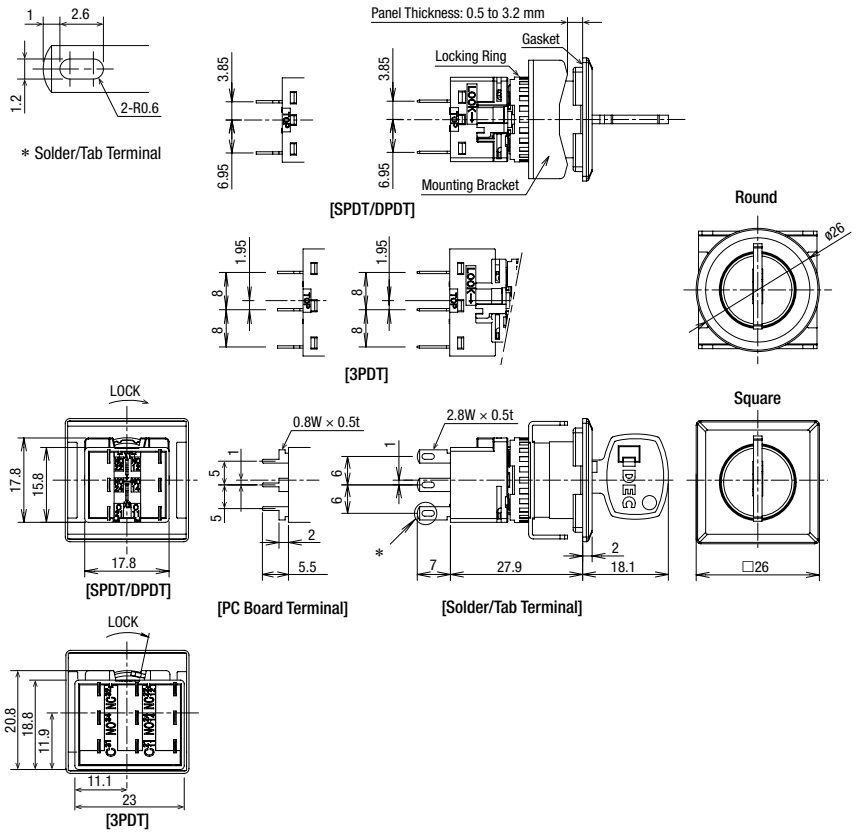


### Terminal Arrangement (Bottom View)

#### SPDT/DPDT Contacts

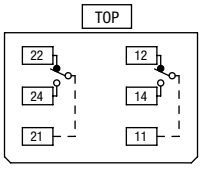


(SPDT contacts on the right only)

#### 3PDT Contacts

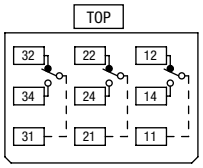


- For details on mounting hole layout, see 593.
- For details on pc board and circuit design, see 594.
- For details on single board mounting, see 593.

## Contact Operation

### Selector Switch, Illuminated Selector Switch, Key Selector Switch

| Operator Position & Contact Operation (Top View) | | | | | | | | |
|---|---|---|---|---|---|---|---|---|
| Position | | | | | Contact | Left | Center | Right |
| 90° 2-position | L R Maintained | | L R Spring return from right | | SPDT | NO1 NC1 C1 | | NO1 NC1 C1 |
| | | | | | DPDT | Left NO1 NC1 C1; Right NO2 NC2 C2 | | Left NO1 NC1 C1; Right NO2 NC2 C2 |
| | | | | | 3PDT | Left NO1 NC1 C1; Center NO2 NC2 C2; Right NO3 NC3 C3 | | Left NO1 NC1 C1; Center NO2 NC2 C2; Right NO3 NC3 C3 |
| 45° 3-position | L C R Maintained | L C R Spring return from right | L C R Spring return from left | L C R Spring return two-way | DPDT | Left NO1 NC1 C1; Right NO2 NC2 C2 | Left NO1 NC1 C1; Right NO2 NC2 C2 | Left NO1 NC1 C1; Right NO2 NC2 C2 |
| | | | | | 3PDT | Left NO1 NC1 C1; Center NO2 NC2 C2; Right NO3 NC3 C3 | Left NO1 NC1 C1; Center NO2 NC2 C2; Right NO3 NC3 C3 | Left NO1 NC1 C1; Center NO2 NC2 C2; Right NO3 NC3 C3 |

### Mounting Hole Layout (mm)

**LBW Series Flush Bezel (LBW6/LBW6M/LBW6G)**

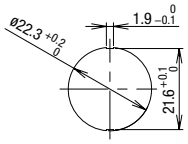


**LBW Series Flush Bezel LBW6/LBW6M/LBW6G**

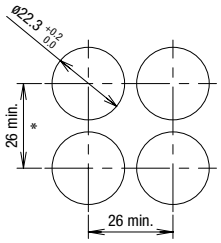


**LBW Series Flush Bezela LBW7/LBW7M/LBW7G**

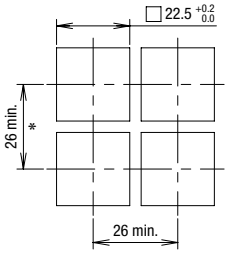


∗ 53 mm minimum for switches with guard

## Single Board Mounting

**IDEC's LBW Series is available for single board mounting.**

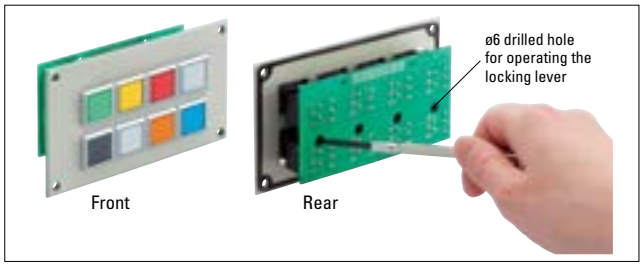


### Assembly Procedure

1. Install the operator to the panel.
2. Mount the contact block to the operator from the rear.
3. Turn the locking lever to lock the contact block.
4. Insert the PC board to terminals and solder.

Note 1: Make sure that each terminal is inserted into the PC board correctly.
Note 2: Do not apply tensile force to the connector cable for an extended period of time.
Note 3: Do not expose the contact block to water.
Note 4: Ensure to lock contact blocks when the contact blocks are installed on the operators.
UP series can be installed on the same board. For details, see 599.

### Installing and Removing Contact Blocks

Turn the locking lever to install and remove contact blocks on the PC using a screwdriver from a hole in the PC board. See "Notes for Designing PC Board and Circuit" on 594. Determine the location of the switches so that the locking lever can be operated. See "Removing and Installing the Contact Block" on 598.

### Mounting Holes and Assembly Procedure

Drill mounting holes in the panel as shown below. When the units are mounted collectively, provide adequate clearance.

## Notes for Designing PC Board and Circuit

**All dimensions in mm.**

- Use 1.6-mm-thick glass epoxy PC board with drilled holes.
- Design a circuit so that the LBW series can operate within the rated voltage and current range. Make sure that inrush current and voltage do not exceed the rating.
- Minimum applicable load is 5V AC/DC, 1 mA on gold contacts. Applicable range is subject to the operating condition and load.
- Since the ∗2.8-mm-wide terminal touches the PC board as shown on the right, short circuit may occur with pattern lines. Design a circuit that prevents short circuits.

### SPDT/DPDT Contacts

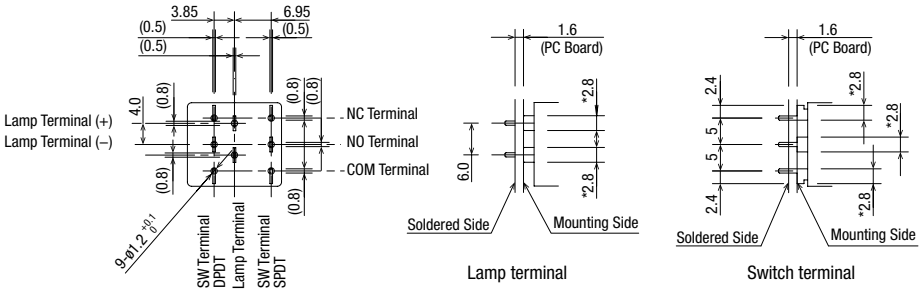


### 3PDT Contacts

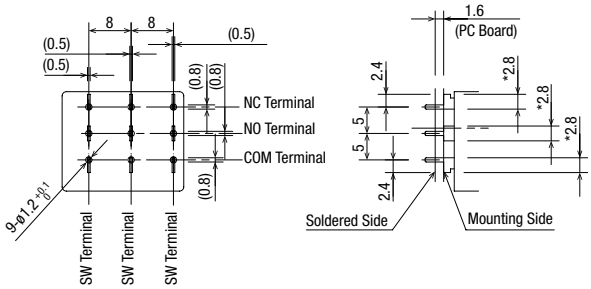


### PC Board Drilling Layout (Bottom View)

### SPDT/DPDT Contacts

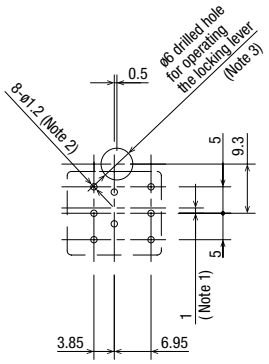


### 3PDT Contacts

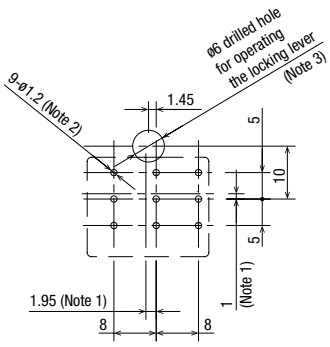


Note 1: When designing, note the alignment of center lines of the contact blocks and center lines of the operators.
Note 2: The diameter of the terminal hole is ø1.2.
Note 3: Hole diameter may vary to meet installation requirements. Determine the location and the size of the hole so that the locking lever can be operated.

## Accessories

| Shape | | | Specification | Part No. | Remarks |
|---|---|---|---|---|---|
| Locking Ring Wrench 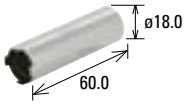  | | | Metal<br>(Nickel-plated brass) | **MT-001** | Used to tighten the locking ring when installing the units on to the panel. |
| For Standard Bezels | Lens Removal Tool | | Stainless<br>Steel | **MT-101** | Used to remove the lens or button.<br>(for standard bezels) |
| For LBW Series Flush Bezels | Mounting Hole Plug<br>① <br>② | 1. For round units (LBW6/LBW6M) | [Plug]<br>Polyamide (Black)<br><br>[Gasket]<br>Nitrile rubber<br><br>[Mounting Plate]<br>Stainless Steel | **LBW9Z-BS6*** | * Color code: blank (black), W (white)<br>Degree of protection: IP65<br>Panel thickness: 0.5 to 3.2 mm<br>See 596 for dimensions. |
| | | 2. For square units (LBW7/LBW7M) | | **LBW9Z-BS7*** | |
| | Mounting Hole Plug | Metal | [Plug]<br>Zinc diecast<br>[Locking Ring]<br>Polyamide<br>[Gasket]<br>Nitrile rubber | **LW9Z-BM** | Degree of protection: IP66<br>Tightening torque: 1.2 N·m<br>See 596 for dimensions. |
| | Mounting Hole Plug | Rubber | Nitrile rubber | **LW9Z-BP1** | Degree of protection: IP65<br>Tightening torque: 2.0 N·m<br>See 596 for dimensions. |
| Terminal Cover<br>① ② | | 1. For SPDT/DPDT contacts | PBT<br>(White) | **LB9Z-VL2** | See 596 for dimensions.<br>See 598 for mounting. |
| | | 2. For 3PDT contacts | | **LB9Z-VL3** | |
| Key<br> <br>Reversible key<br> <br>Non-reversible key | | For key selector switches<br>(wave key) | Metal<br>(zinc nickel-plated) | **LA9Z-SK-*** | Specify a key number in place of * in the Part No.<br>Blank: Standard key 0H (reversible)<br>1H to 2H: Reversible key<br>3H to 6H: Non-reversible key<br>See 596 for dimensions. |
| Keys | | For key selector switches<br>(disc tumbler key) | Metal (brass nickel-plated)<br>18×1.8×25.1 t1.8 | **AS6-SK-132** | |

## Accessories

| Shape | | Material / Dimensions (W×H×D) | Part No. | Remarks |
|---|---|---|---|---|
| LBW Series: Lens 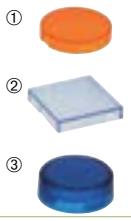 | 1. For round flush units | Polyarylate ø20 H4 | **HA9Z-L11∗** | Specify the color code in place of ∗ in the part no. A: Amber, C: Clear, G: Green, R: Red, S: Blue, Y: Yellow Note: Use a clear lens for pure white (PW) illumination. |
| | 2. For square flush units | Polyarylate ø20 H4 | **HA9Z-L21∗** | |
| | 3. For round extended units | Polyarylate ø20.2 H7.8 | **LBW9Z-L12∗** | Specify the color code in place of ∗ in the part no. A: Amber, G: Green, R: Red, S: Blue, W: clear, Y: Yellow Note: Use a clear lens for pure white (PW) illumination. |
| LBW Series: Buttons | 1. For round flush units | Polyacetal ø20 H3.2 (L5) | **HA9Z-B11∗** | Specify the color code in place of ∗ in the part no. B: Black, G: Green, R: Red, S: Blue W: White, Y: Yellow |
| | 2. For square flush units | Polyacetal ø20 H3.9 (L5) | **HA9Z-B21∗** | |
| | 3. For round extended units | Polyacetal ø19.8 H7.3 (L9.1) | **HA9Z-B12∗** | |
| LBW Series: Marking plate | 1. For round flush units | Acrylic ø17 t0.85 (L1.1) | **HA9Z-P1∗** | Specify the color code in place of ∗ in the part no. B: Black, W: White |
| | 2. For square units | Acrylic □18.4 t0.85 | **HA9Z-P2∗** | |
| | 3. For extended units | Acrylic ø15 t3.0 | **LBW9Z-P12W** | |
| LBW Series: Anti-rotation Ring | LBW series | Metal (Stainless steel) 25×8.2×24.8 t0.8 | **LBW9Z-LP6** | |
| Locking ring | All models | Polyamide ø17.9 H3.9 | **LB9Z-LN** | |

## Dimensions for Accessories

**All dimensions in mm.**

### For round units (LBW9Z-BS6∗)

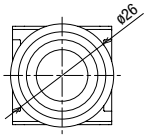


### Mounting Hole Layout

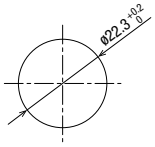


### For round units (LBW9Z-BS6∗)

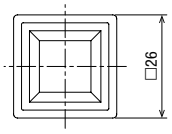


### Mounting Hole Layout

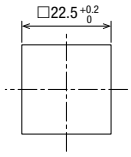


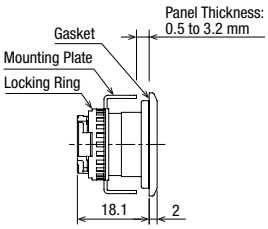


### Terminal Cover

#### For SPDT/DPDT contacts (LB9Z-VL2)

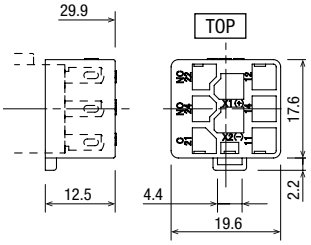


#### For 3PDT contacts (LB9Z-VL3)

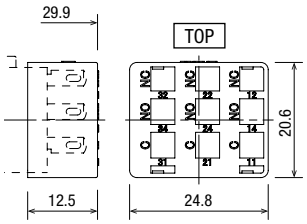


### Key (Wave Key)

#### Reversible key

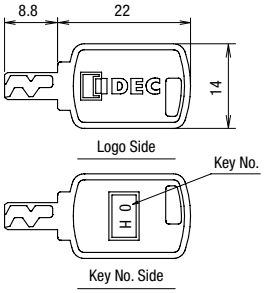


#### Non-reversible key

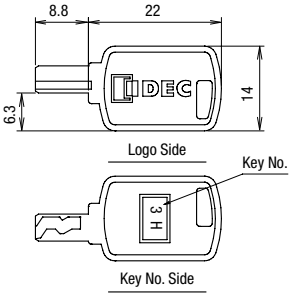

## Maintenance Parts

### Maintenance LED Unit

Package Quantity: 1

| Shape | Rated Operating Voltage | Part No. (Ordering No.) | * Color Code |
|---|---|---|---|
| LED Unit | 5V DC | **LB9Z-LED5∗** | A: Amber<br>G: Green<br>PW: Pure White<br>R: Red<br>S: Blue<br>W: White |
| | 12V AC/DC | **LB9Z-LED1∗** | |
| | 24V AC/DC | **LB9Z-LED2∗** | |

- Use a pure white (PW) LED unit for yellow (Y) illumination.

## Transformer

Package Quantity: 1

| Transformer | Primary Voltage | Secondary Voltage | Part No. (Ordering No.) | Applicable Load |
|---|---|---|---|---|
| For 24V | 100/110V AC | 100/110V AC ±10% | **TWR512** | LB9Z-LED2∗ (24V AC/DC LED unit) |
| | 200/220V AC | 200/220V AC ±10% | **TWR522** | |
| | 400/440V AC | 400/440V AC±10% | **TWR542** | |

- Terminal cover (TWR-VL3) is supplied as standard.
- Connect one LB9Z-LED2∗ to a transformer.

### Specifications

| Part No. | TWR5□2 |
|---|---|
| Operating Voltage | 100/110V AC, 200/220V AC, 400/440V AC (50/60Hz) |
| Current Draw | 2.4VA |
| Rated Insulation Voltage | 600V |
| Insulation Resistance | 100 MΩ minimum (500V DC megger) |
| Operating Temperature | –30 to +60°C (no freezing) |
| Storage Temperature | –40 to +80°C (no freezing) |
| Operating Humidity | 35 to 85% RH (no condensation) |
| Vibration Resistance | Damage Limits: 30 Hz, amplitude 1.5 mm<br>Operating extremes: 5 to 55 Hz, amplitude 0.5 mm |
| Shock Resistance | Damage limits: 1,000 m/s$^2$<br>Operating Extremes: 100 m/s$^2$ |
| Dielectric Strength | 2,500V AC, 1 minute |
| Terminal Screw | M3.5 |
| Applicable Wire | 2 mm$^2$ maximum, 2 wires maximum |
| Weight (approx.) | 87g |

### Dimensions

**All dimensions in mm.**

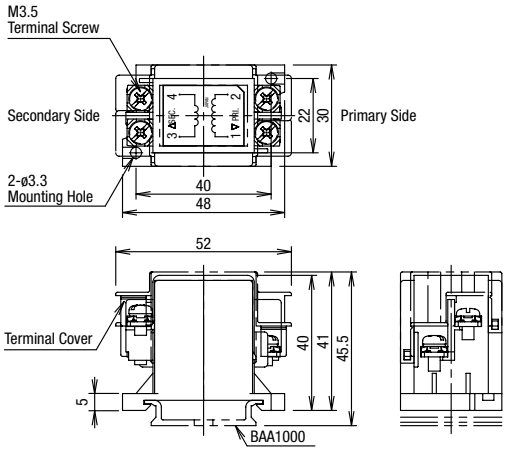


- Use end clip BC9Z-E/N35NPN10 when using 400/440V AC primar y voltage transformers.

## Precautions & Instructions

### ⚠ Safety Precautions

- Turn off the power to the LBW series control units before installation, removal, wiring, maintenance, and inspection. Failure to turn power off may cause electrical shocks or fire hazard.
- To avoid burning your hand, use the lamp holder tool when replacing the lamps.
- For wiring, use wires of a proper size to meet voltage and current requirements. Solder correctly according to the instructions in "Wiring" and "Notes on Terminal Cover." Improper soldering may cause overheating and create a fire hazard. Also, when using tab terminals, use receptacles of appropriate size.

## Instructions

### Wiring

1. Solder the terminals at 350°C within 3 seconds using a 60W soldering iron. Sn-Ag-Cu type is recommended. When soldering, do not touch the LB series with the soldering iron. Also ensure that no tensile force is applied to the terminals. Do not bend the terminal or apply excessive force to the terminal.
2. Use non-corrosive liquid flux.

### Terminal Cover

### Solder/tab terminal

Insert the terminal cover into the contact block with the TOP markings on the contact block and the terminal cover in the same direction.

Note: When wiring, insert the lead wires into the terminal cover holes before soldering. After wiring, terminal covers cannot be installed.

### Standard Bezel

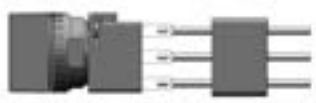

### Flush Bezel

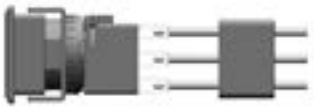

### Operating Environment

- Do not use the LB series where corrosive gases exist or under an environment exceeding the operating temperature and humidity ranges. Otherwise, damage such as contact failure or change of the surface color may occur.
- Major parts of the switch are plastic. Scratches or damage may occur when scraped with a sharp object or if excessive load or shock is applied. Note that this may cause operation and appearance failure of the operator and bezel.
- Application of detergent, cutting oil, or special chemicals to the switch may result in operation and/or appearance failure such as a change in surface color.

### Handling

### Contacts (micro switch)

When using NC (normally closed) and NO (normally open) contacts of the same microswitch, avoid connections of different voltages, or connections of different types of power supplies. Failure to observe this instruction may cause a short-circuit.

### Removing and Installing the Contact Block

3. Turn the locking lever on the contact block in the direction opposite to the arrow on the housing. Then the contact block can be removed.
4. Insert the contact block with the TOP markings on the contact block and the operator placed in the same direction. Then lock the units, turning the locking lever in the direction of the arrow.

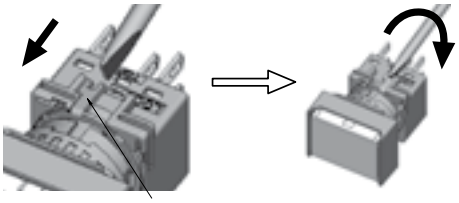


### Panel Mounting

Remove the contact block from the operator. Insert the operator into the panel cut-out from the front, then install the contact block to the operator.

### Flush Bezel

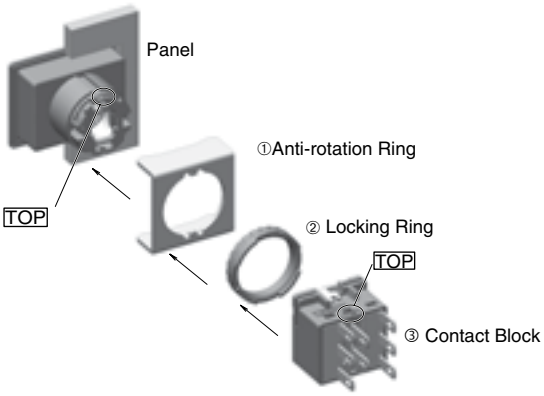


### Notes on Mounting

Use the optional ring wrench (MT-001) to mount the operator onto the panel. Tightening torque should not exceed 0.7 N·m. Do not use pliers. Excessive tightening will damage the locking ring.

# Mounts on the same panel as LB/LBW series

- Three illumination colors: Green (G), red (R), and white (W)

## Specifications

| | | | |
|---|---|---|---|
| Color Code | | Red (R), White (W) | G (Green) |
| Rated Current (I) | | 7mA | 2mA |
| Maximum Current (Ta: 25°C) | Reverse Voltage ($V_R$) | 9V | 5V |
| | Operating Temperature ($T_{opr}$) | –25 to +55°C (no freezing) | |
| | Storage Temperature ($T_{stg}$) | –30 to +80°C (no freezing) | |
| Forward Voltage ($V_f$) | | Standard value: 2V (If=7mA) | Standard value: 2.7V (If=2 mA) |
| Dielectric Voltage | | Between live and dead parts: 500V AC, 1 minute | |
| Weight (approx.) | | 4.3g (UP8-89V1), 5.1g (UP8-89V2) | |

## UP Series

| Mounting Hole Size | Shape | Degree of Protection (IEC 60529) | Matching LB/LBW Mounting Style | Part No. | Illumination Color Code |
|---|---|---|---|---|---|
| ø8 UP8 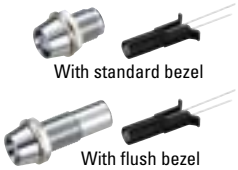 With standard bezel With flush bezel | Shroud | IP40 | Standard Bezel | **UP8-89V1**∗ | Specify the color code in place of ∗ in the Part No. G: green R: red W: white |
| | | | Flush Bezel | **UP8-89V2**∗ | |
| ø9 UP9P | Shroud | IP65 | Standard bezel Flush bezel | **UP9P-99V1**∗ | |

- LED cannot be replaced.

Note: Connect an external current limiting resistor in series. Otherwise, the LED may be damaged.

## Dimensions

All dimensions in mm.

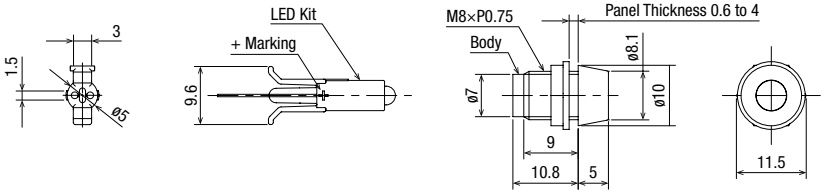


UP8-89V1

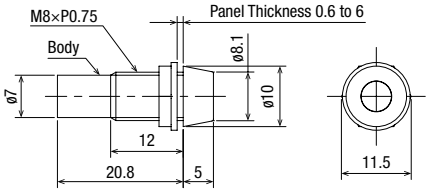


UP8-89V2

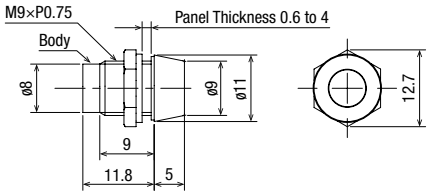


UP9P-99V1

## [Assembly Drawing]

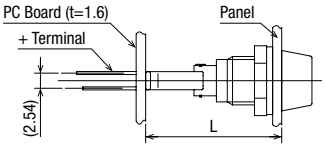


### Dimensions (L )

| | |
|---|---|
| Standard Bezel | 22.5mm |
| Flush Bezel | 29.9mm |

## PC Board Mounting Hole

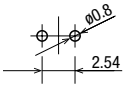


## Panel Cut-out

**UP8**

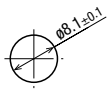


**UP9P**

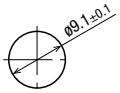


## Internal Circuit

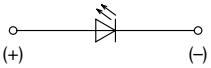


The longer pin is the positive terminal

## Safety Precautions

- **Turn off power to the unit before installation, removal, wiring, maintenance, and inspection.**
  **Failure to turn off may cause electrical shocks or fire hazard.**
- **For wiring, use wires of a proper size to meet the voltage and current requirements.**
- **Improper soldering or failure to tighten the terminal screw may cause overheating and fire.**

## Single Board Mounting

UP series miniature pilot light single board mounting types can be mounted with LB/ LBW series on the same panel.
Follow the instructions below on single board mounting.

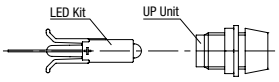


1. Mount the LED kit to the PC board.

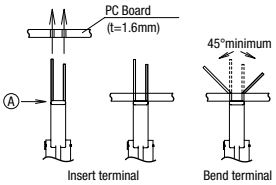


**Temporary mounting**

1. Note the polarity of the terminals and insert the terminals to the PC board.
2. Make sure that part A of the LED kit is pressed tightly to the PC board. Bend the terminals sideways as shown on the left.

2. Mount the operator and the UP series pilot lights on to the control panel.

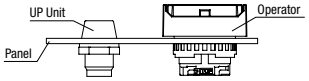


3. Mount the contact block to the operator of the miniature control unit and lock the unit by turning the locking lever.

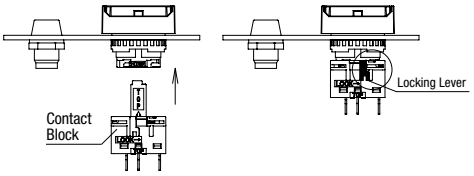


4. Install the PC board in 1. to the panel in 3.

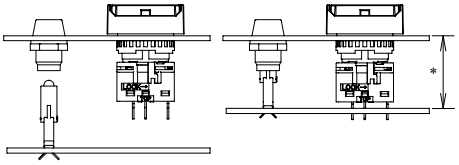


Note: Make surethat the LED kit is inserted into the UP series unit.

∗ When mounting LB/LBW and UP series on a single board, make sure that the distance between the front of the panel and the mounting side of the PC board (gasket distortion is taken into consideration) is as shown in the table below.

| Part No. | Mountable Unit | Distance (∗) |
|---|---|---|
| UP8-89V1∗ | Standard bezel | 22.5mm |
| UP8-89V2∗ | Flush bezel | 29.9mm |
| UP9P-99V1∗ | Standard bezel | 22.5mm |
| | Flush bezel | 29.9mm |

5. Solder the terminals.
   Before soldering, make sure that each terminal of the contact block is securely inserted into the PC board holes.

## Instructions

### Polarity

Pay attention to the polarity of the power supply as UP series units do not contain a diode for protection against reverse polarity. The long terminal is positive and the short terminal is negative.

### Current Limiting Resistor

When using a UP series unit without a built-in current limiting resistor, connect an external current limiting resistor. Calculate the resistance using the following formula.

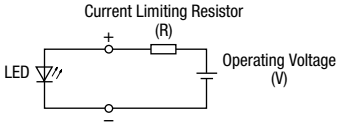


$$\text{Resistance } (\Omega) = \frac{\text{Operating Voltage (V)} - \text{Forward Voltage (Vf)}}{\text{Rated Current (I)} *}$$

∗ Rated Current (I) = R (red), W (white) : 0.007A
G (green) : 0.002A
Forward Voltage (Vf) = R (red), W (white) : 2V
G (green) : 2.7V

Note: Use a resistor of higher resistance than the calculated value (Ω)

$$\text{Rated Wattage of Resistor (W)} = \text{Rated Current (I)} \times \text{Operating Voltage (V)} \times 2 \text{ to } 3 *$$

∗ 2 to 3 is a safety factor

**<Current Limiting Resistor Reference Value>**

| Color / Operating Voltage | Red (R), White (W) | Green (G) |
|---|---|---|
| 5V DC | 430Ω (1/4W) | 1200Ω (1/4W) |
| 6V DC | 560Ω (1/4W) | 1600Ω (1/4W) |
| 12V DC | 1500Ω (1/4W) | 4700Ω (1/4W) |
| 24V DC | 3000Ω (1/2W) | 11000Ω (1/4W) |

### Wiring

Solder the terminal at 350°C within 3 seconds using a 60W soldering iron. SnAgCu type lead-free solder is recommended.
When soldering, do not touch the pilot light housing with the terminal. Do not bend the terminal or apply excessive force to the terminal.

### Notes on Panel Mounting

Tightening torque should not exceed 0.49 N·m. Do not use pliers. Do not tighten with excessive force, otherwise the locking ring will be damaged.

### PC Board and Circuit Design

Use glass epoxy copper clad laminate, double-sided through-hole PC boards with a thickness of 1.6 mm.

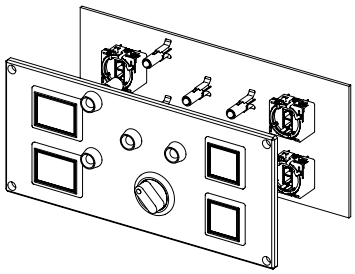

Example of single board mounting