SAMZO | REAC/ROHS

REV	ECN NO	DESRIPTION	DESIGN	APPROVAL	DATE
A1	NEW	Replace frame			2018.06.12

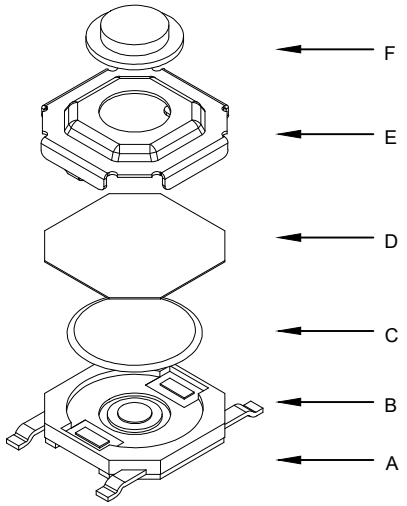

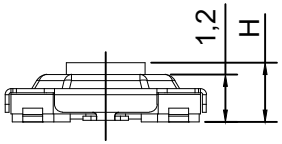

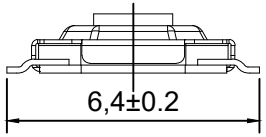

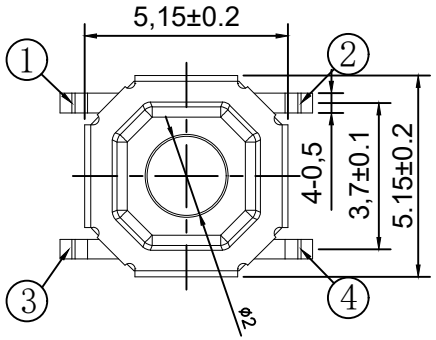

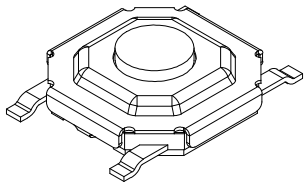

主要技术参数、性能
The Main Thchnology Performance

额定电流、电压 Rate voltage.current	50mA DC12V
接触电阻 Contact resistance	≤100mΩ
按力 Operating force	±30gf
行程 Travel	0.20±0.10mm
绝缘电阻 Insulated resistance	≥100MΩ
介电强度 Dielectric strength	≥250VAC/1min

T5 A15 8 5 4 B 1 0

- Coding:T0 Regular
- Board mounting requirement:Without pillar
- Welding pins:4PIN
- Mounting method:Vertical surface mount
- Operating life:5-500,000/ 7-1,000,000 times
- Operating force:4-100/6-160/8-260gf
- Operating height:A15-1.5/A20-2.0/.../A50-5.0 mm(1.5-5.0mm)
- Product series: 5.2*5.2mm Copper head series.

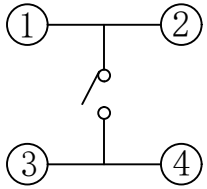

电路图
CIRCUIT DIAGRAM

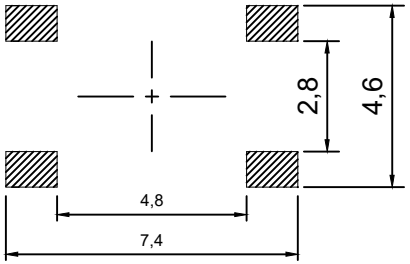

PCB. 焊接图
PCB. WELDING DRAWING

ITEM	DESCRIPTION	MATERIAL	QTY	FINSH/COLOR					
F	按钮	黄铜	1	酸洗					
E	盖板	不锈钢（精钢）	1	清洗				GENERAL TOLERANCE	
D	防尘膜	聚酰亚胺	1	橙黄色				≥0~2<	±0.15
C	弹片	不锈钢(精钢)	1	镀银	DESIGN	WANGGUIFA	2018.06.12	≥2~5<	±0.25
B	本件	LCP	1	黑色	CHECKED	ZHENGUILAN	2018.06.12	≥0~2<	±0.15
A	卡件	黄铜	1	镀银	APPROVED	LILIANJIANG	2018.06.14	≥5	±0.35

FIRST VIEW

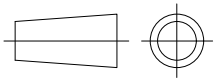

SCALE	1:1	UNIT	mm

The copyright belongs to samzo parts [China] Co., Ltd. please use the material after samzo parts agree to authorize. The final right of interpretation belongs to samzo parts.
WWW.KKK-JP.COM

SAMZO COMPONENTS
Electronic switch and connector manufacturer

TITLE:: 5.2*5.2*H铜头四脚贴片
DWG NO：T5A15-P701
PART NO：T5A1519000
MODEL NO：T5-A**-*-*-4B10
NAME：TACT SWITCH