REVISIONS					
REV.	ECN NO.	LOCATION	DESCRIPTION	DATE	DESIGN
A0	N/A		INITIAL RELEASE	/	/
A1	N/A		图面升级整理图面	2024.12.2	阿树

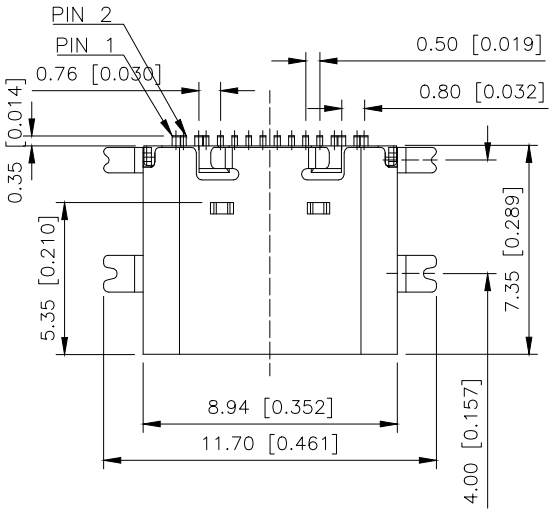

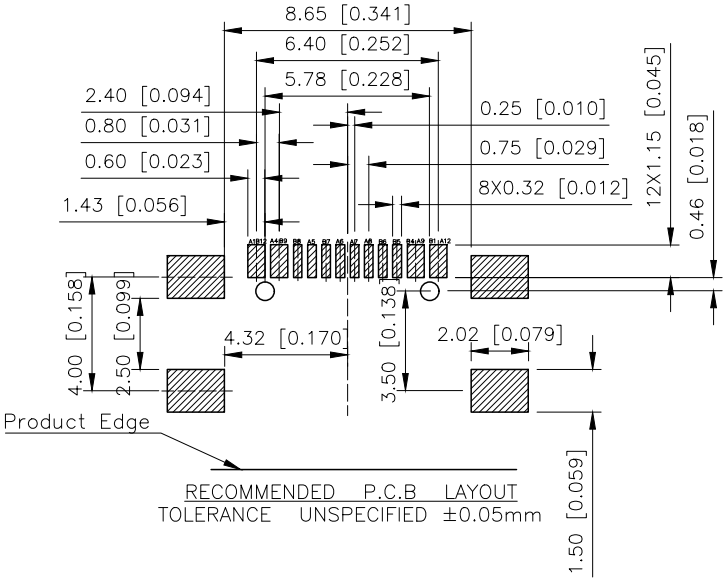

RECOMMENDED P.C.B LAYOUT
TOLERANCE UNSPECIFIED ±0.05mm

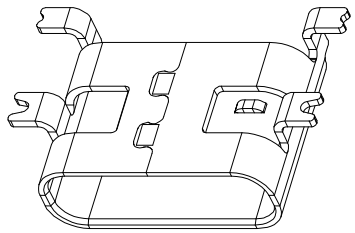

U262-16XN-4BS1735

- 1:AU 1U'' / 2:AU 3U'' / 5:AU 15U'' / 6:AU 30U''
- 1:PBT / 2:PA6T / 3:PA9T / 4:LCP
- W:WHITE / B:BLACK
- 1:WITH / 2:WITHOUT

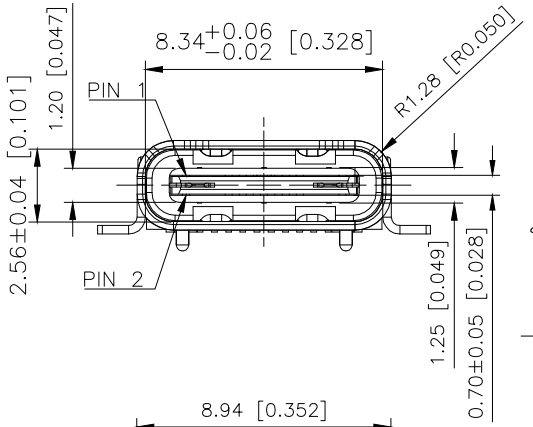

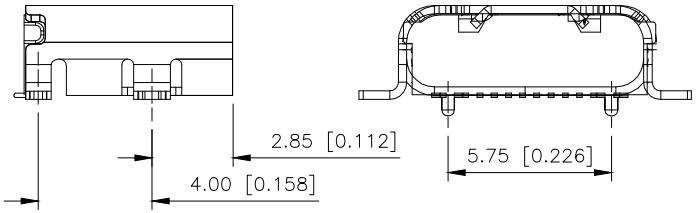

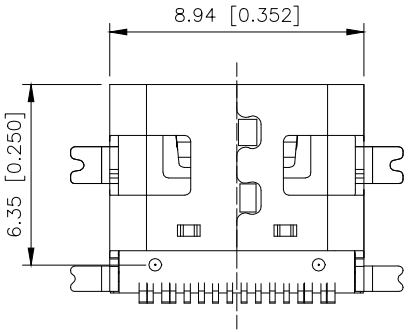

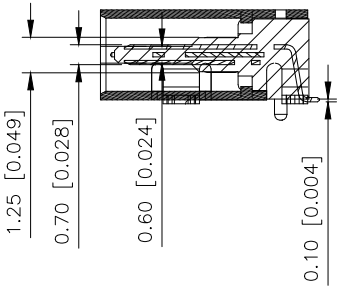

A1	GND	B12	GND
A4	VBUS	B9	VBUS
A5	CC1	B8	SBU2
A6	DP1	B7	DN2
A7	DN1	B6	DP2
A8	SBU1	B5	CC2
A9	VBUS	B4	VBUS
A12	GND	B1	GND
PIN	SIGNAL NAME	PIN	SIGNAL NAME

SPECIFICATION:

1. Material
   - Housing Material: High temperature thermoplastic
   - Contact Terminal: High Grade Copper Alloy
   - Merallic Shell: Stainless Steel
   - Inner Ground Cover Shell: Stainless Steel
   - Mid Plate: Stainless Steel
2. Mechanical:
   - 2.1. Mating force: 5–20Nf;
   - 2.2. Unmating force: Initial: 8–20Nf; Final: 6–20Nf;
   - 2.3. Durability: 5000 Cycles;
3. Electrical:
   - 3.1. Current Rating: 3A
   - 3.2. Voltage Rating: 20V Max.;
   - 3.3. Dielectric Withstanding volage: 100Vac, 60S, 10mA;
   - 3.4. Contact resistance: 40m Ohms Max.;
   - 3.5. Insulation Resistance: 100M Ohms Min.;
4. Environmental:
   - 4.1. Operating temperature: −40℃~+85℃;
   - 4.2. Salt Spray Test: 24H Min. (No oxidation or rust);

AuGLAR	±5°
X.	±0.40
X.x	±0.30
X.xx	±0.20
X.xxx	±0.15
UNSPECIFIED TOLERAuCES	

XKB Connection 星创

DESIGN	阿树	VIEW:	MODEL TYPE: 3.1 TYPE C
CHECKED		UNIT: mm/in	PART NO.: U262-16XN-4BS1735
APPROVED		SIZE: A4	DWG NO.:

XKB INDUSTRIAL PRECISION CO.,LIMITED

SCALE	PAGE	REVISION
N/A	1/1	A1