SAMZO | REAC/ROHS

REV	ECN NO	DESRIPTION	DESIGN	APPROVAL	DATE
A1	NEW	Replace frame			2019.02.27

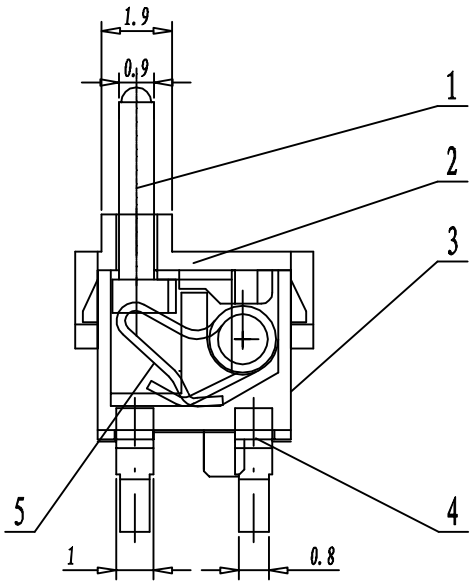

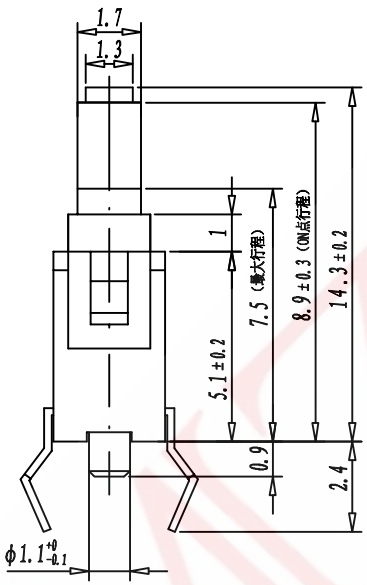

Technical requirements
Rated load:DC 30V 0.1A
Switching withstand voltage:AC 500V
Contact resistance:≤300 mΩ
Insulation resistance:≥50 MΩ
Actuating force:30±10gf
Electrical life:50,000 Cycles

7	6430	1	1	14	1
①	②	③	④	⑤	⑥

1.Series: Micro Switch
2.Format: Size(mm)
3.Welding method: 4P-DIP
4.Function: Normally Open (NO)
5.Button Height: 14.3mm
6.Mould Number: A1

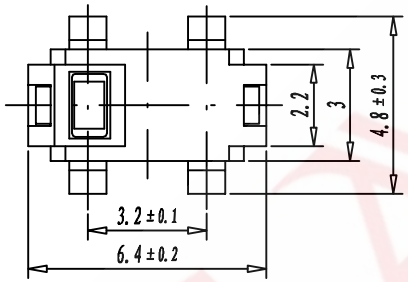

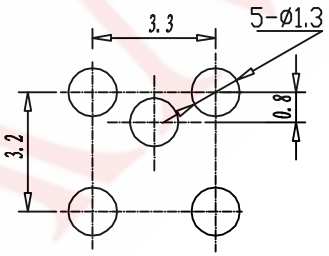

ITEM	DESCRIPTION	MATERIAL	QTY	FINSH/COLOR					
5	弹簧	磷铜	1	镀银				GENERAL TOLERANCE	
4	接线片	黄铜	1	镀银				≥0~2<	±0.15
3	基座	PA66	1	黑色	DESIGN	WANGGUIFA	2018.06.12	≥2~5<	±0.25
2	盖子	POM	1	黑色	CHECKED	ZHENGUILAN	2018.06.12	≥0~2<	±0.15
1	按柄	POM	1	黑色	APPROVED	LILIANJIANG	2018.06.14	≥5	±0.35

FIRST VIEW

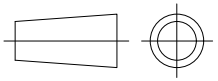

SCALE	1:1	UNIT	mm

The copyright belongs to samzo parts [China] Co., Ltd. please use the material after samzo parts agree to authorize. The final right of interpretation belongs to samzo parts.
WWW.KKK-JP.COM

SAMZO COMPONENTS
Electronic switch and connector manufacturer

TITLE:: 6.4*3.0*14.3 四脚插件单定位
DWG NO: 76430-P0153
PART NO: 764302011091
MODEL NO: 7643011141
NAME: MICRO SWITCH