FRONT VIEW
FEMALE INSERT CONFIGURATION CHART

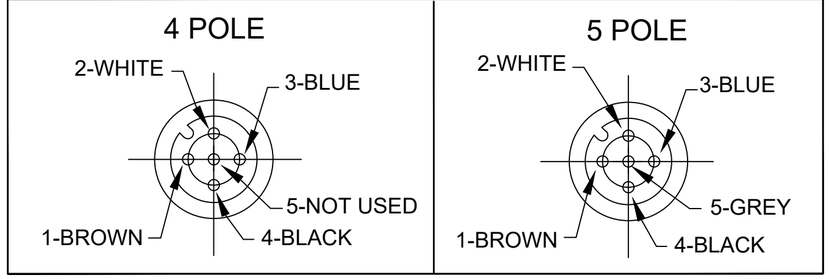

SAP P/N #	ENGINEERING P/N	FINISHED LENGTH
1200700168	8R4000A16M005	0.5M [1FT 8 IN]
1200704013	8R5000A16M030	3M [9FT 10 IN]
1200700172	8R4000A16M060	6M [19FT 8 IN]

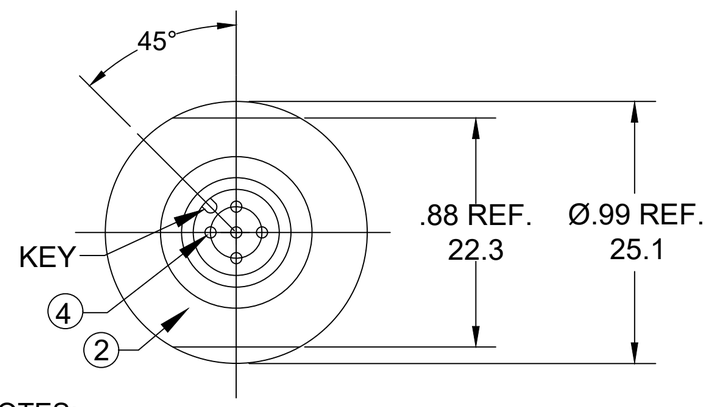

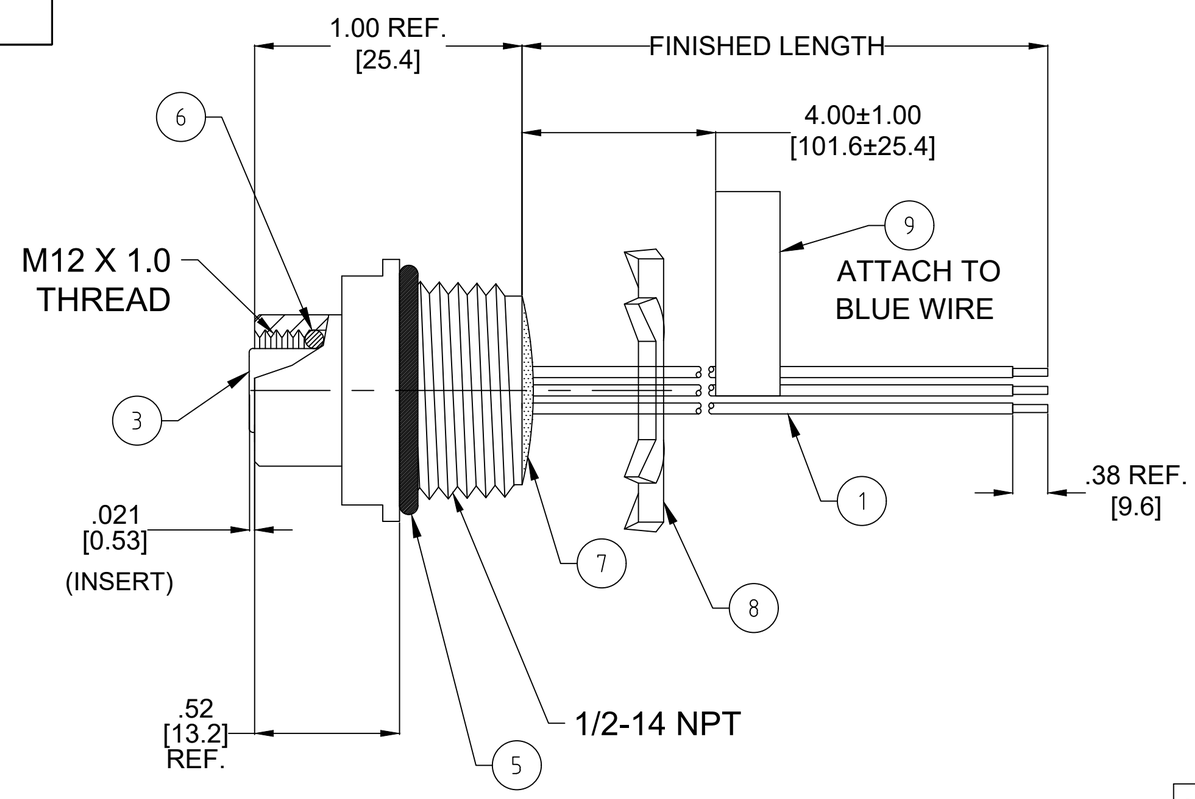

KNOCKOUT HOLE

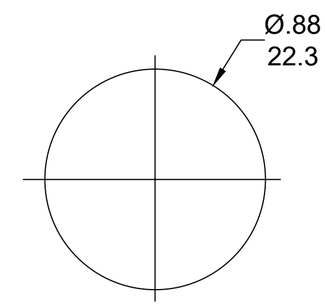

NOTES:
1. MATERIAL: AS NOTED
2. FINISH: AS NOTED
3. ELECTRICAL:
   VOLTAGE: 4 & 5P 250V
   CURRENT: 4A
4. TEMP RATING: -20°C TO +105°C
5. PROTECTION: IP67 (WHEN MATED)
6. CSA CERTIFIED FILE: LR6837
7. ALL DIMENSIONS ARE FOR REFERENCE UNLESS TOLERANCED OR NOTED OTHERWISE

PART NO. LEGEND

8R4000A16M005

POLES (4, 5)

FINISHED LENGTH:
M005= 0.5 METER
M010= 1 METER
M100= 10 METER

CABLE LENGTH TOLERANCES
<.3M [1FT]: +19mm-0 [+.75in-0]
.3 - .9M [1 - 3FT]: +44.5mm-0 [+1.75in-0]
.9 - 1.8M [3 - 6FT]: +55.6mm-0 [+2.19in-0]
1.8 - 3.7M [6 - 12FT: +88.9mm-0 [+3.50in-0]
3.7 - 7.3M [12 - 24FT]: +165.1mm-0 [+6.50in-0]
7.3-14.6M [24 - 48FT]: +317.5mm-0 [+12.50in-0]
14.6 - 30.5M [48-100FT]: +622.3mm-0 [+24.50in-0]
OVER 30M [100FT] +2% OF FINISHED LENGTH

ITEM	COMPONENT	MATERIAL	FINISH
9	LABEL	VINYL	BLACK/YELLOW
8	LOCKNUT	STEEL	ZINC PLATED
7	POTTING MATERIAL	EPOXY	
6	O-RING (MATING)	VITON	RED
5	O-RING (PANEL)	NITRILE	BLACK
4	CONTACT SOCKET	COPPER ALLOY	GOLD OVER NICKEL
3	FEMALE INSERT	NYLON	BLACK
2	SHELL FM M12x1	ZINC DIE CAST	NICKEL PLATED
1	WIRE #18	PVC	SEE FACE VIEW

B1

THIS DRAWING CONTAINS INFORMATION THAT IS PROPRIETARY TO MOLEX ELECTRONIC TECHNOLOGIES, LLC AND SHOULD NOT BE USED WITHOUT WRITTEN PERMISSION

FUNCTIONAL SYMBOLS: FA=0, FC=0, FP=0
DIVISIONAL SYMBOLS

DIMENSION UNITS: INCH/MM
SCALE: NTS

GENERAL TOLERANCES (UNLESS SPECIFIED)

	mm	INCH
4 PLACES	±----	±----
3 PLACES	±----	±----
2 PLACES	±----	±----
1 PLACE	±----	±----
0 PLACES	±----	±----
ANGULAR TOL ±	---- °	

DRAFT WHERE APPLICABLE MUST REMAIN WITHIN DIMENSIONS

CURRENT REV DESC: ITEM-2 SHELL FINISH CHANGED FROM YELLOW TO NICKEL PLATED

EC NO: 790201
DRWN: ABENJAMINLW 2024/06/21
CHK'D: RSTONE 2022/11/03
APPR: BWOODMAN 2022/11/03

INITIAL REVISION:
DRWN: RSTONE 2012/11/05
APPR: JFMURPHY 2013/02/07

molex

MICRO-CHANGE RECEPTACLE, A-SIZE, 4-5 POLE, FEMALE, STRAIGHT, SINGLE KEY, 18 AWG

PRODUCT CUSTOMER DRAWING

DOCUMENT NUMBER	DOC TYPE	DOC PART	REVISION
SD-120070-043	PSD	001	B1

THIRD ANGLE PROJECTION	DRAWING	SERIES	MATERIAL NUMBER	CUSTOMER	SHEET NUMBER
	C-SIZE	120070		GENERAL MARKET	1 OF 1

DOCUMENT STATUS	P1	RELEASE DATE	2024/06/21 19:50:33

FORMAT: IN-ACAD-tb-prod-C
REVISION: B
DATE: 2020/01/14