SAMZO | REAC/ROHS

REV	ECN NO	DESRIPTION	DESIGN	APPROVAL	DATE
A1	NEW	Replace frame			2018.06.12

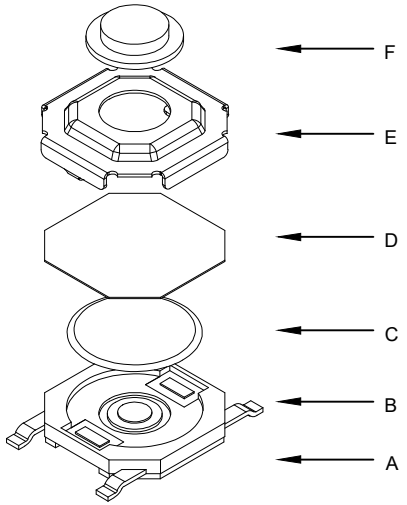

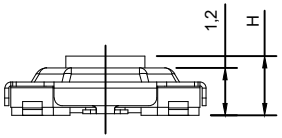

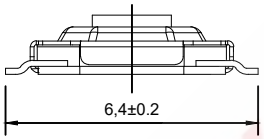

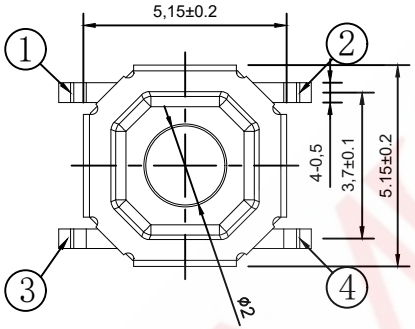

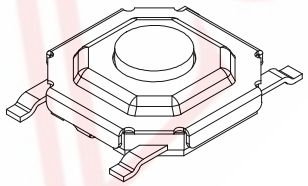

主要技术参数、性能
The Main Thchnology Performance

额定电流、电压 Rate voltage.current	50mA DC12V
接触电阻 Contact resistance	≤100mΩ
按力 Operating force	定制
行程 Travel	0.20±0.10mm
绝缘电阻 Insulated resistance	≥100MΩ
介电强度 Dielectric strength	≥250VAC/1min

G	4	B	*	*	*	*	1	*
Ⓐ	Ⓑ	Ⓒ	Ⓓ		Ⓔ	Ⓕ	Ⓖ	Ⓗ

A.产品系列:G-5.2*5.2mm塑头系列
B.贴装方式:4-立式贴片
C.贴装规格:B-4P
D.贴装高度:15-1.5mm/17-1.6mm/20-2.0mm/.../50-5.0mm/(1.5-5.0)
E:操作力度:1-100gf/2-160gf/3-260gf
F:操作寿命:1-10万次/2-50万次/3-100万次/4-200万次
G:固定方式:1-无柱
H:物料编码:S-常规/E-±15/R-±20gf（定制）

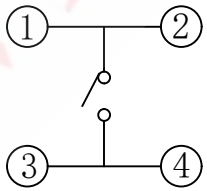

电路图
CIRCUIT DIAGRAM

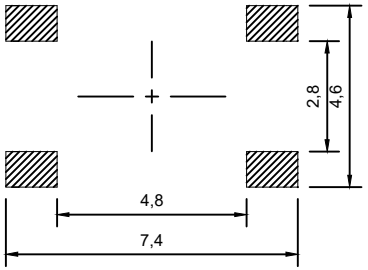

PCB.焊接图
PCB.WELDING DRAWING

ITEM	DESCRIPTION	MATERIAL	QTY	FINSH/COLOR					
F	按钮	PPA	1	白色					
E	盖板	不锈钢	1	清洗				GENERAL TOLERANCE	
D	防尘膜	聚酰亚胺	1	橙黄色				≥0~2<	±0.15
C	弹片	不锈钢	1	镀银	DESIGN	WANGGUIFA	2018.06.12	≥2~5<	±0.25
B	本件	PPA	1	黑色	CHECKED	ZHENGUILAN	2018.06.12	≥0~2<	±0.15
A	卡件	黄铜	1	镀银	APPROVED	LILIANJIANG	2018.06.14	≥5	±0.35

FIRST VIEW

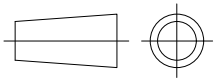

SCALE 1:1 UNIT mm

The copyright belongs to samzo parts [China] Co., Ltd. please use the material after samzo parts agree to authorize. The final right of interpretation belongs to samzo parts.
WWW.KKK-JP.COM

SAMZO COMPONENTS
Electronic switch and connector manufacturer

TITLE:: 5.2*5.2*H mm 4P-LT
DWG NO: G4B1819-P58
PART NO: G4B1819080
MODEL NO: G4B**-*-*-1-*
NAME: TACT SWITCH