REVISIONS					
REV.	ECN NO.	LOCATION	DESCRIPTION	DATE	DESIGN
A0	N/A		INITIAL RELEASE	/	/
A1	N/A		图面升级整理图面	2025.2.22	阿树

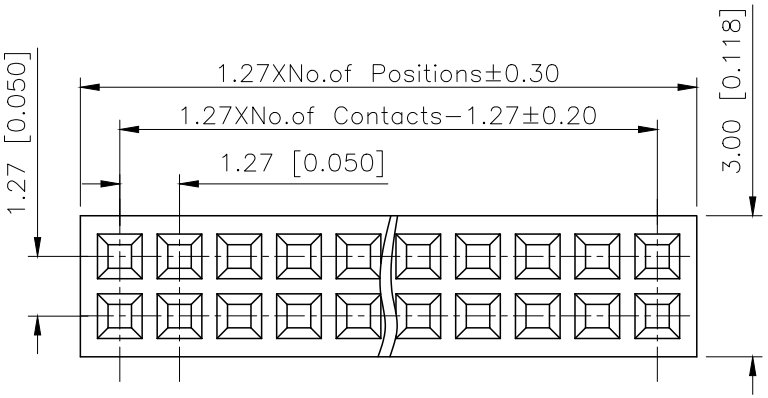

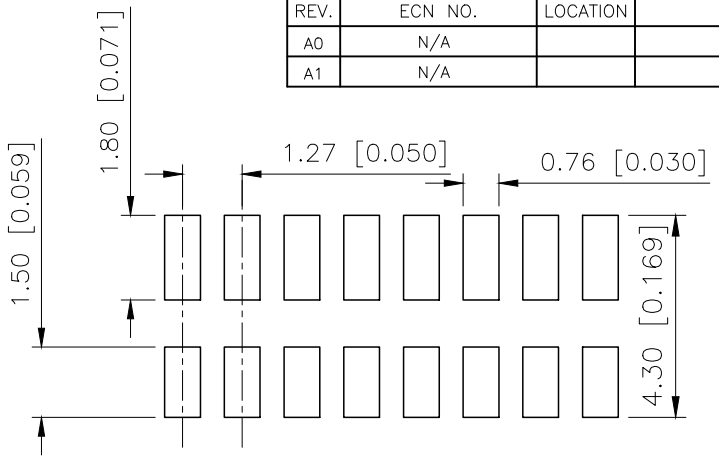

P.C.B LAYOUT

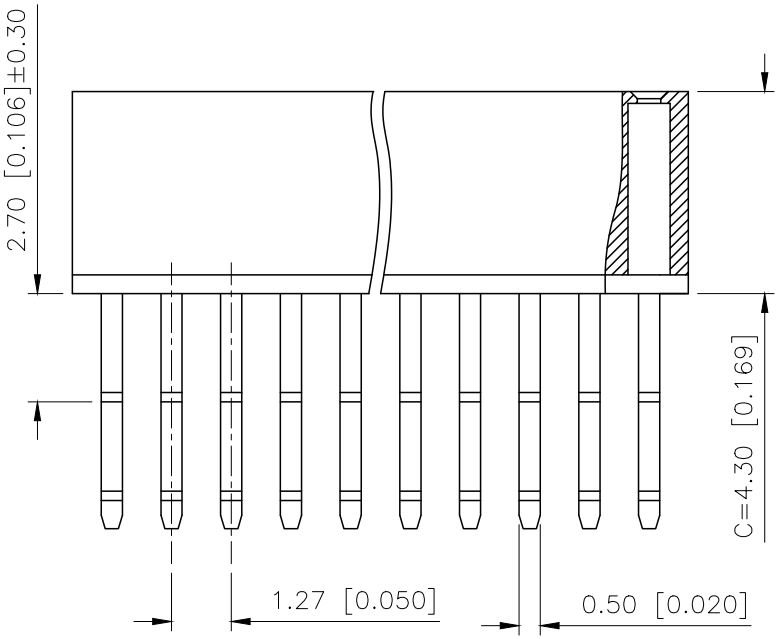

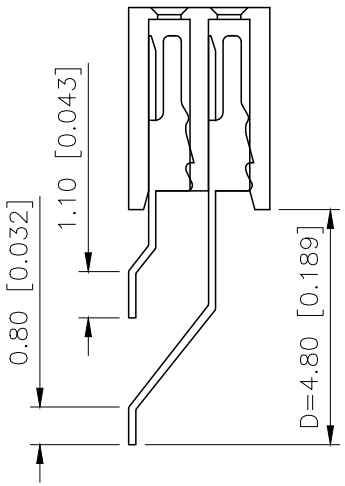

Specifications:
规格：
Voltage rating:250V AC/DC
额定电压：250V AC/DC
Current rating:1A AC/DC
额定电流：1A AC/DC
Withstanding voltage:300V AC/minute
耐受电压：300V AC/分钟
Temperature range:−40℃−+105℃
温度范围：−40℃−+105℃
Insulation resistance:≥500MΩ
绝缘电阻：≥500MΩ
Contact resistance:≤20mΩ
接触电阻：≤20mΩ
Material:PA6T UL94V−0
材质：PA6T UL94V−0
Plating Category:1U"Gold
镀层：1U"Gold
Reflow soldring temperature:260±5℃，10S
回流焊温度：260±5℃，10S

PART NO.:

X1321 F R S−2xXX−C43 D48
① ② ③ ④ ⑤ ⑥ ⑦

①Series No
②Category:F−Famale
③Welding Board Angle:R−Stright 90°
④Welding Way:S−SMT
⑤Row No.Pin No:2xXX−2x01~2x40P
⑥Plastic Height:C=4.3mm
⑦Pin Length:D=4.8mm

PART NO	Material	Material(Pin)	Suitable XKB Wafer
X1321FRS−2xXX−C43D48	PA6T	Brass	X1321W

AuGLAR	±5°
X.	±0.40
X.x	±0.30
X.xx	±0.20
X.xxx	±0.15
UNSPECIFIED TOLERAuCES	

XKB Connection 星创

DESIGN	阿树	VIEW:	MODEL TYPE: 1.27mm BTB Connector
CHECKED		UNIT: mm/in	PART NO.: X1321FRS−2xXX−C43D48
APPROVED		SIZE: A4	DWG NO.:

XKB INDUSTRIAL PRECISION CO.,LIMITED

SCALE	PAGE	REVISION
N/A	1/1	A1