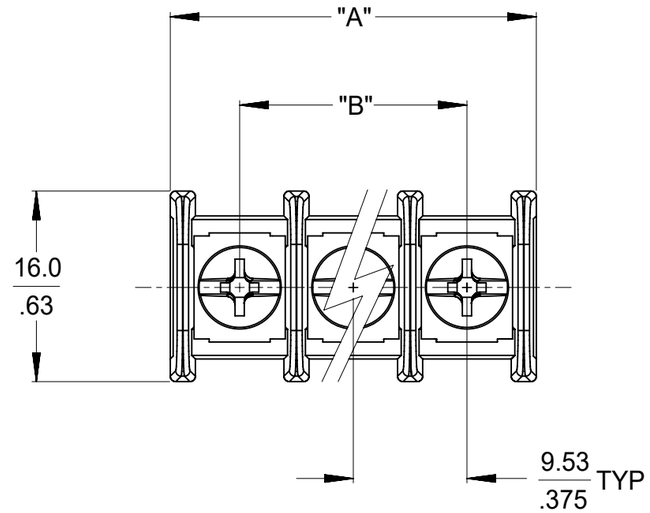

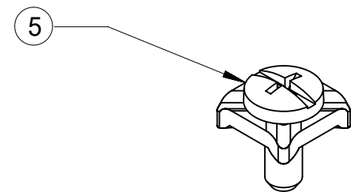

REF. -50 OPT. SCREW
(WHERE APPLICABLE)

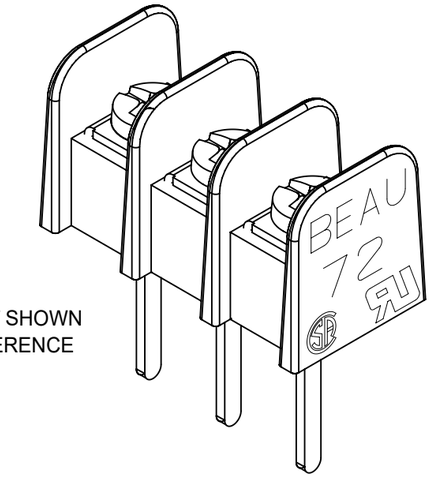

3 CIRCUIT SHOWN
FOR REFERENCE

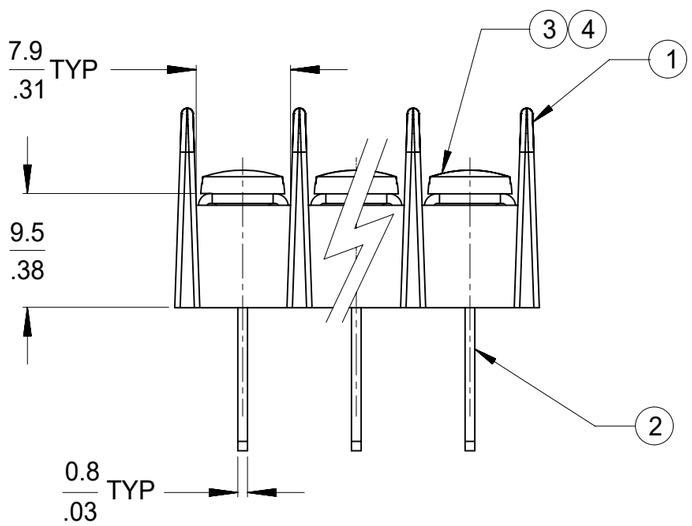

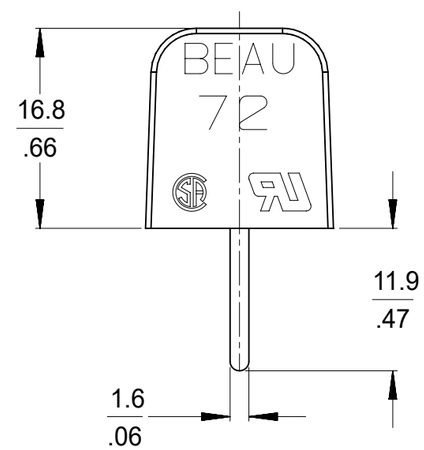

NO OF CIRCUITS	DIM "A"		DIM "B"		ASSY. MAT. NO. (STD -C)	ASSY. MAT. NO. (-C -49 OPT)	ASSY. MAT. NO. (-C -50 OPT)
	mm	Inch	mm	Inch			
2	21.1	0.83	9.53	0.375	----------	387212902	387213502
3	30.6	1.21	19.05	0.750	----------	387212903	----------
4	40.2	1.58	28.58	1.125	387212304	387212904	387213504
5	49.7	1.96	38.10	1.500	----------	387212905	----------
6	59.2	2.33	47.63	1.875	----------	387212906	387213506
7	68.7	2.71	57.15	2.250	387212307	387212907	----------
8	78.3	3.08	66.68	2.625	387212308	387212908	----------
9	87.8	3.46	76.20	3.000	387212309	387212909	----------
10	97.3	3.83	85.73	3.375	----------	387212910	----------
11	106.8	4.21	95.25	3.750	----------	387212911	387213511
12	116.4	4.58	104.78	4.125	----------	387212912	----------
13	125.9	4.96	114.30	4.500	----------	387212913	----------
14	135.4	5.33	123.83	4.875	387212314	387212914	387213514
15	144.9	5.71	133.35	5.250	387212315	387212915	387213515
16	154.5	6.08	142.88	5.625	----------	387212916	387213516
17	164.0	6.46	152.40	6.000	387212317	387212917	387213517
18	173.5	6.83	161.93	6.375	----------	387212918	----------
19	183.0	7.21	171.45	6.750	387212319	387212919	387213519
20	192.6	7.58	180.98	7.125	----------	387212920	----------
21	202.1	7.96	190.50	7.500	387212321	387212921	387213521
22	211.6	8.33	200.03	7.875	387212322	387212922	387213522
23	221.1	8.71	209.55	8.250	387212323	387212923	387213523
24	230.7	9.08	219.08	8.625	----------	387212924	387213524
25	240.2	9.46	228.60	9.000	387212325	387212925	----------
26	249.7	9.83	238.13	9.375	387212326	387212926	387213526

NOTES:

1. MATERIAL: SEE TABLE.
2. FINISHES: SEE TABLE.
3. PRODUCT SPECIFICATION: NOT REQUIRED.
4. "XX" REFERS TO THE QUANTITY OF CIRCUITS.
5. ROHS COMPLIANT.

ITEM	QTY.	DESCRIPTION	MATERIAL	FINISH
4	XX	SCRW&WSHR,#6-32X.25 PANHD,PH-SL (OPT -50)	STEEL	ZN, CLEAR CHROMATE
4	XX	SCREW #6-32X.250 BHD PHSL (OPT -49)	BRASS	NICKEL PLATE
3	XX	SCREW #6-32X.250 BHD PHSL (STD)	STEEL	ZN, CLEAR CHROMATE
2	XX	TERM WW 6C SN-KT	BRASS	TIN PLATE
1	1	INSULATOR SR BTS PC MOMTG	POLYESTER (PBT)	BLACK

DOCUMENT STATUS | P1 | RELEASE DATE | 2024/08/13 06:11:36

THIS DRAWING CONTAINS INFORMATION THAT IS PROPRIETARY TO MOLEX ELECTRONIC TECHNOLOGIES, LLC AND SHOULD NOT BE USED WITHOUT WRITTEN PERMISSION

DIMENSION UNITS: mm/IN | SCALE: 2:1

GENERAL TOLERANCES (UNLESS SPECIFIED)

	MM	INCH
4 PLACES	±	±
3 PLACES	±	± 0.005
2 PLACES	± 0.13	± 0.01
1 PLACE	± 0.3	±
0 PLACES	±	±
ANGULAR TOL	± 2.0 °	

DRAFT WHERE APPLICABLE MUST REMAIN WITHIN DIMENSIONS

CURRENT REV DESC: REMOVED OBSOLETED PART NUMBERS AS PER PCN#515181.

EC NO: 793827
DRWN: RAVINR1 2024/06/04
CHK'D: GGA 2024/08/13
APPR: GGA 2024/08/13

INITIAL REVISION:
DRWN: J.ENCINAS 2009/06/25
APPR: J.MACNEIL 2009/06/25

THIRD ANGLE PROJECTION | DRAWING: B-SIZE | SERIES: 38721

molex

9.53MM/.375" PCB
BARRIER TERMINAL STRIP NO MOUNTING ENDS

PRODUCT CUSTOMER DRAWING

DOCUMENT NUMBER	DOC TYPE	DOC PART	REVISION
SD-38721-006	PSD	001	A1

MATERIAL NUMBER	CUSTOMER	SHEET NUMBER
SEE TABLE	GENERAL MARKET	1 OF 1

FORMAT: Eng-lega-master-tb-prod-B
REVISION: E1
DATE: 2021/05/01