THIS DRAWING IS UNPUBLISHED. RELEASED FOR PUBLICATION 2014
© COPYRIGHT 2014 BY -TE CONNECTIVITY ALL RIGHTS RESERVED.

| LOC | DIST |
|---|---|
| - | - |

REVISIONS

| P | LTR | DESCRIPTION | DATE | DWN | APVD |
|---|---|---|---|---|---|
| | A | REVISED PER E.O A 12952 | 17MAR1993 | - | JA |
| | B | REVISED PER E.O P15222 | 12FEB1997 | - | RDR |
| | C | REVISED PER E.O P15887 | 15FEB1999 | - | RDR |
| | C1 | REVISED PER E.O-15-000356 | 08JAN2015 | PS | DM |

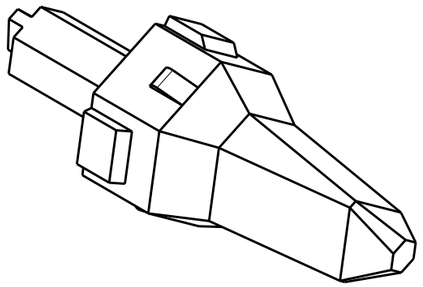

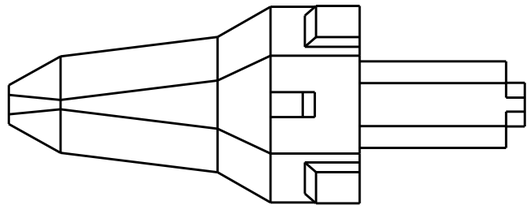

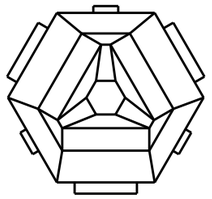

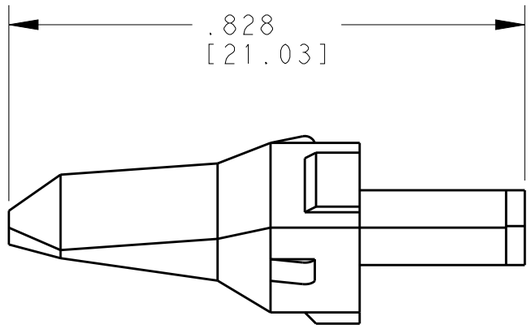


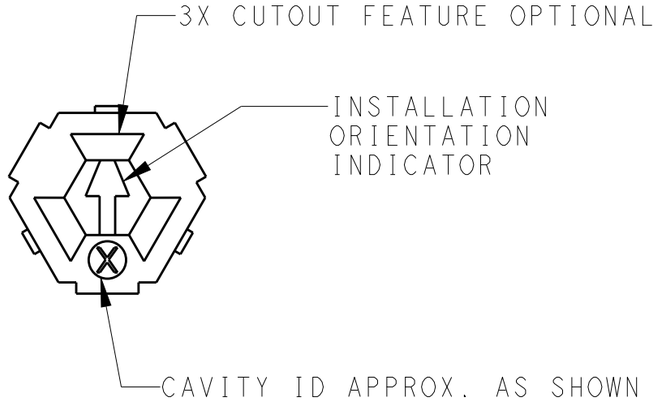


1. USED WITH DT04-3P-****(****= ALL MODIFICATIONS)
   CONSULT FACTORY FOR MODIFICATION AND APPLICATION.

NOTES:

THIS DRAWING IS A CONTROLLED DOCUMENT.

DIMENSIONS: INCHES[mm]

TOLERANCES UNLESS OTHERWISE SPECIFIED:

| | |
|---|---|
| 0 PLC | ±- |
| 1 PLC | ±- |
| 2 PLC | ±- |
| 3 PLC | ±0.20[0.51] |
| 4 PLC | ±- |
| ANGLES | ±0°30'0" |

MATERIAL: PBT30%GF GREEN

FINISH: -

| | | |
|---|---|---|
| DWN | A.LEE | 04FEB1999 |
| CHK | S.THEIS | 08FEB1999 |
| APVD | S.THEIS | 08FEB1999 |

PRODUCT SPEC: -

APPLICATION SPEC: -

WEIGHT: 0.53g

CUSTOMER DRAWING

TE Connectivity

NAME: WEDGE LOCK 3 WAY RECEPTACLE DT SERIES

| SIZE | CAGE CODE | DRAWING NO | RESTRICTED TO |
|---|---|---|---|
| A3 | 4AFU8 | C-W3P | - |

SCALE 4:1 SHEET 1 OF 1 REV C1

1470-19 (3/11)