M12 4 POL AC
FEMALE

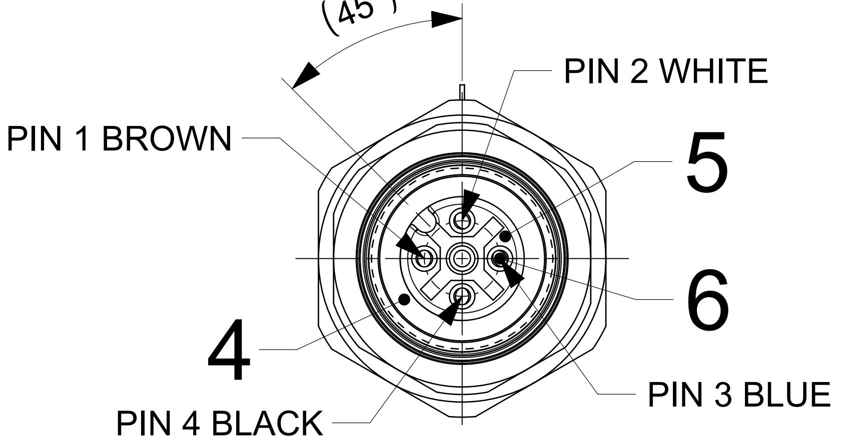

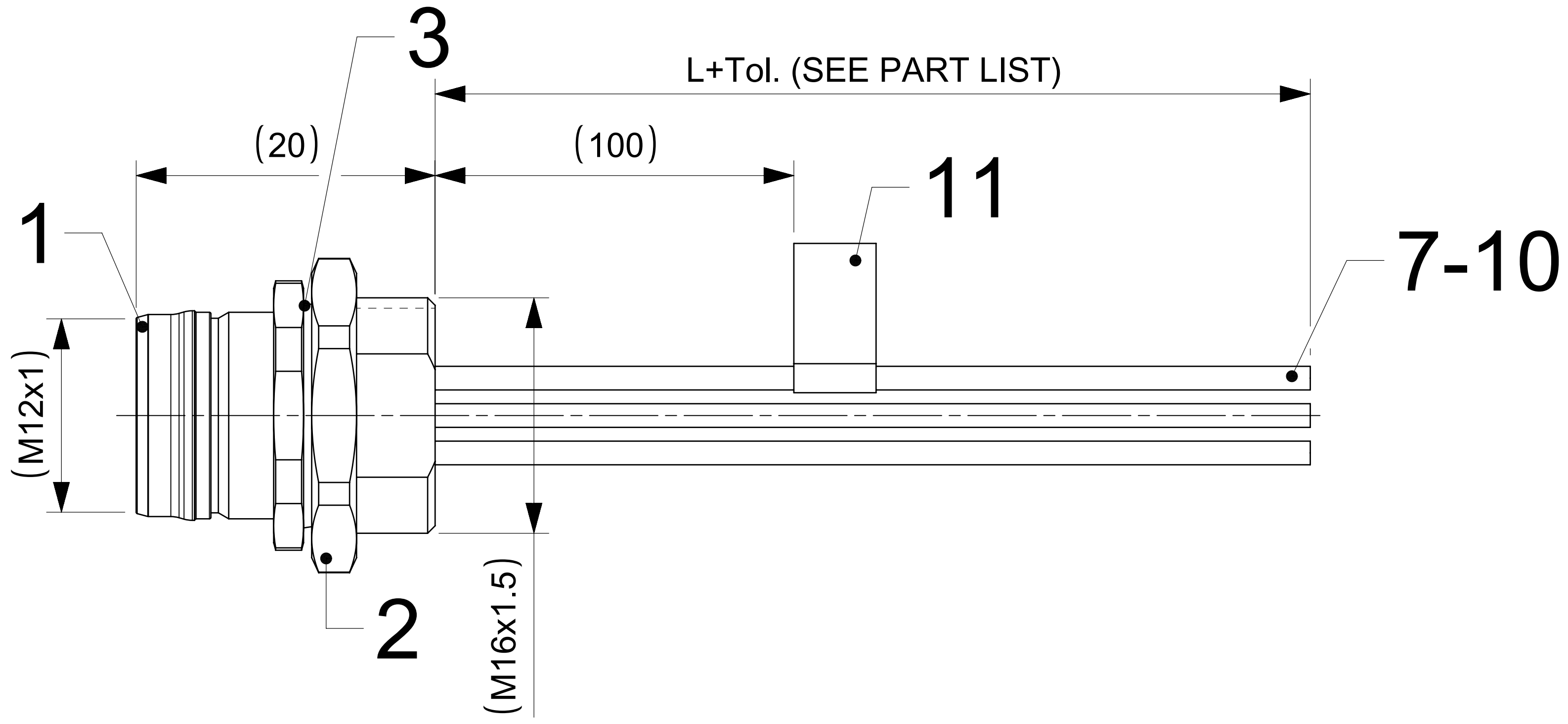

M12 5 POL AC
FEMALE

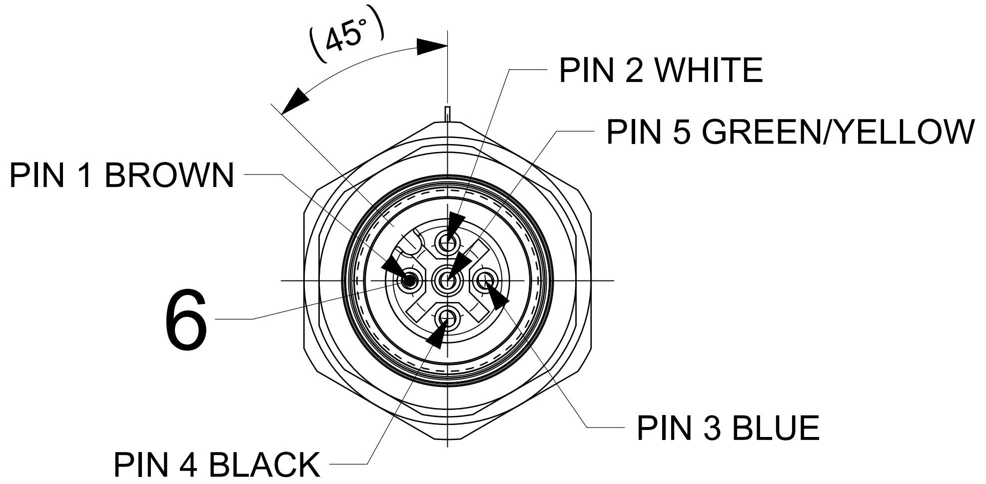

M12 8 POL AC
FEMALE

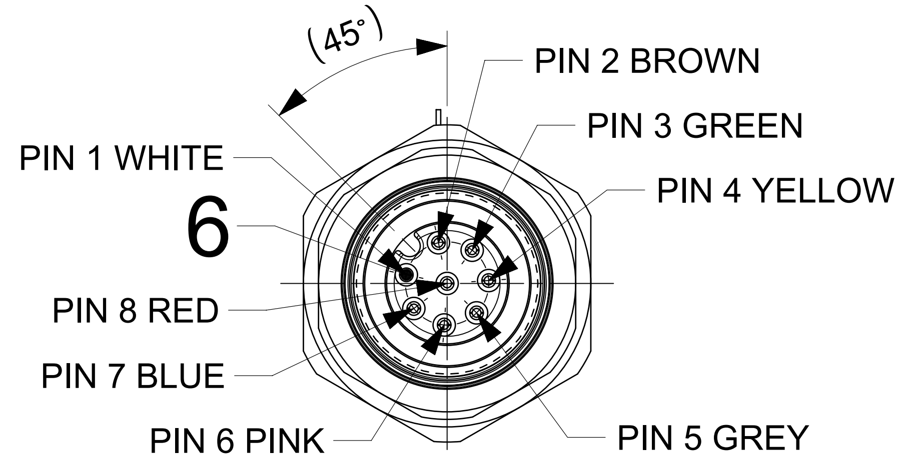

M12 12 POL AC
FEMALE

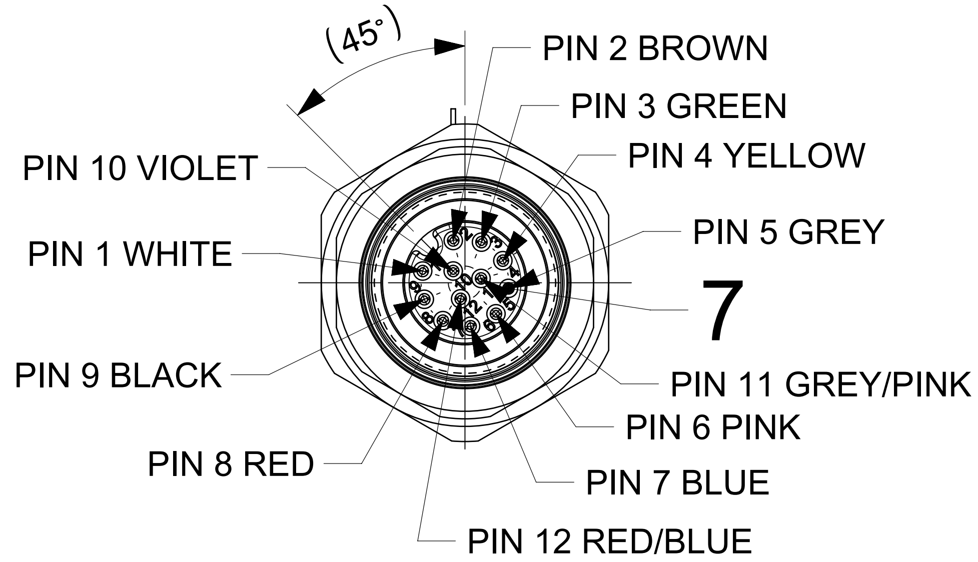

M12 4 POL DC
FEMALE

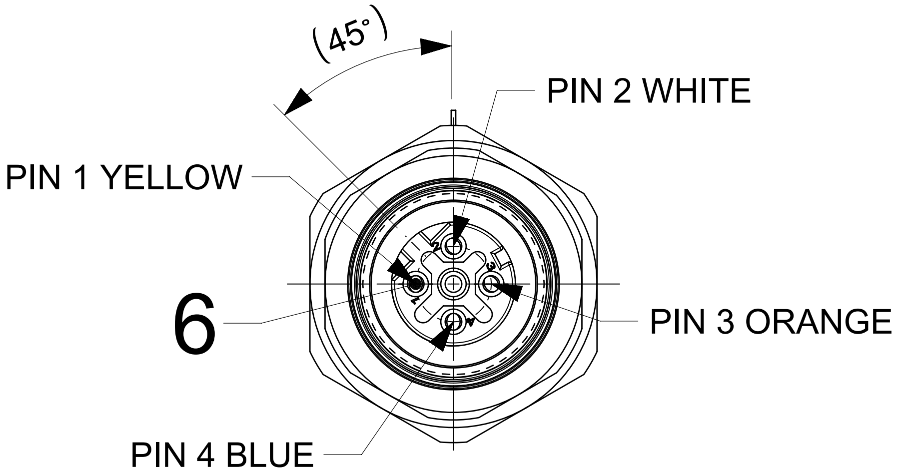

THIS DRAWING CONTAINS INFORMATION THAT IS PROPRIETARY TO MOLEX ELECTRONIC TECHNOLOGIES, LLC AND SHOULD NOT BE USED WITHOUT WRITTEN PERMISSION

FUNCTIONAL SYMBOLS	DIMENSION UNITS: mm	SCALE: 2:1
FA = 0	GENERAL TOLERANCES (UNLESS SPECIFIED)	
FC = 0	ANGULAR TOL ±	1.0 °
FP = 0	4 PLACES ±	
DIVISIONAL SYMBOLS	3 PLACES ±	
	2 PLACES ±	0.05
	1 PLACE ±	0.3
	0 PLACES ±	0.5
	DRAFT WHERE APPLICABLE MUST REMAIN WITHIN DIMENSIONS	

CURRENT REV DESC: CHANGED MIN. TEMP. IN TABLE

EC NO:	736602	
DRWN:	RSCHIEBER	2023/01/30
CHK'D:	RSILLER	2023/01/31
APPR:	RSILLER	2023/01/31
INITIAL REVISION:		
DRWN:	FDAFERNER	2021/02/15
APPR:	RSILLER	2022/07/12

molex

REC U12 XP XC FE M16 FM WIR BRASS NI XM

PRODUCT CUSTOMER DRAWING

DOCUMENT NUMBER	DOC TYPE	DOC PART	REVISION
1204040021	PSD	000	A1

THIRD ANGLE PROJECTION	DRAWING	SERIES	MATERIAL NUMBER	CUSTOMER	SHEET NUMBER
	A3-SIZE	120404	SEE PART LIST	GENERAL MARKET	1 OF 3

DOCUMENT STATUS	P1	RELEASE DATE	2023/01/31	08:21:39

FORMAT: master-tb-prod-A3
REVISION: J
DATE: 2020/01/14

TABLE 1 - 4P A-CODE

ITEM	QTY	DESCRIPTION	MATERIAL	FINISH/COLOR
1	1	SHELL M16 FE BRASS FM L20 NI REC U12	BRASS	Ni
2	1	NUT M16X1.5 BRASS NI HEX		
3	1	GASKET OR NBR 11X2 BK	NBR	BLACK
4	1	GASKET OR FPM 7.1X1.35 RD 60	FPM	RED
5	1	INSERT M12 FE 4P AC TPU BK UNSH	TPU	BLACK
6	4	CONTACT 10 FE STA AU CR WRA 0.14-0.50	BRASS	Au
7	1	WIRE;22AWG;BU;1.58;PVC;17x0.16;UL1569	PVC	BLUE
8	1	WIRE;22AWG;BN;1.58;PVC;17x0.16;UL1569		BROWN
9	1	WIRE;22AWG;BK;1.58;PVC;17x0.16;UL1569		BLACK
10	1	WIRE;22AWG;WH;1.58;PVC;17x0.16;UL1569		WHITE
11	1	LABEL;SELF L.YELLOW(2.25X.75IN)	VINYL	YELLOW
12	-	POTTING MATERIAL	-	-

TABLE 2 - 5P A-CODE

ITEM	QTY	DESCRIPTION	MATERIAL	FINISH/COLOR
1	1	SHELL M16 FE BRASS FM L20 NI REC U12	BRASS	Ni
2	1	NUT M16X1.5 BRASS NI HEX		
3	1	GASKET OR NBR 11X2 BK	NBR	BLACK
4	1	GASKET OR FPM 7.1X1.35 RD 60	FPM	RED
5	1	INSERT M12 FE 5P AC TPU BK UNSH	TPU	BLACK
6	5	CONTACT 10 FE STA AU CR WRA 0.14-0.50	BRASS	Au
7	1	WIRE;22AWG;BU;1.58;PVC;17x0.16;UL1569	PVC	BLUE
8	1	WIRE;22AWG;BN;1.58;PVC;17x0.16;UL1569		BROWN
9	1	WIRE;22AWG;BK;1.58;PVC;17x0.16;UL1569		BLACK
10	1	WIRE;22AWG;WH;1.58;PVC;17x0.16;UL1569		WHITE
11	1	WIRE;20AWG;GN/YE;1.76;PVC;26x0.16;UL1569		GREEN/YELLOW
12	1	LABEL;SELF L.YELLOW(2.25X.75IN)	VINYL	YELLOW
13	-	POTTING MATERIAL	-	-

TABLE 3 - 8P A-CODE

ITEM	QTY	DESCRIPTION	MATERIAL	FINISH/COLOR
1	1	SHELL M16 FE BRASS FM L20 NI REC U12	BRASS	Ni
2	1	NUT M16X1.5 BRASS NI HEX		
3	1	GASKET OR NBR 11X2 BK	NBR	BLACK
4	1	GASKET OR FPM 7.1X1.35 RD 60	FPM	RED
5	1	INSERT M12 FE 8P AC REC PUR BK UNSH	PUR	BLACK
6	8	CONTACT 8 FE TUR AU CR SHORT 7/8POLE	BRASS	Au
7	1	WIRE;24AWG;BU;1.43;PVC;11x0.16;UL1569	PVC	BLUE
8	1	WIRE;24AWG;BN;1.43;PVC;11x0.16;UL1569		BROWN
9	1	WIRE;24AWG;YE;1.43;PVC;11x0.16;UL1569		YELLOW
10	1	WIRE;24AWG;GN;1.43;PVC;11x0.16;UL1569		GREEN
11	1	WIRE;24AWG;GY;1.43;PVC;11x0.16;UL1569		GREY
12	1	WIRE;24AWG;PK;1.43;PVC;11x0.16;UL1569		PINK
13	1	WIRE;24AWG;RD;1.43;PVC;11x0.16;UL1569		RED
14	1	WIRE;24AWG;WH;1.43;PVC;11x0.16;UL1569		WHITE
15	1	LABEL;SELF L.YELLOW(2.25X.75IN)	VINYL	YELLOW
16	-	POTTING MATERIAL	-	-

TABLE 4 - 12P A-CODE

ITEM	QTY	DESCRIPTION	MATERIAL	FINISH/COLOR
1	1	SHELL M16 FE BRASS FM L20 NI REC U12	BRASS	Ni
2	1	NUT M16X1.5 BRASS NI HEX		
3	1	GASKET OR NBR 11X2 BK	NBR	BLACK
4	1	GASKET OR FPM 7.1X1.35 RD 60	FPM	RED
5	1	INSERT M12 FE 12P AC PUR BK SHD	PUR	BLACK
6	1	M12S-FRONT SHELL-FEMALE SHIELD	BRASS	Ni
7	12	M12-Fem-Contact-12pol		Au
8	1	WIRE;26AWG;BU;1.30;PVC;7x0.16;UL1569	PVC	BLUE
9	1	WIRE;26AWG;BN;1.30;PVC;7x0.16;UL1569		BROWN
10	1	WIRE;26AWG;YE;1.30;PVC;7x0.16;UL1569		YELLOW
11	1	WIRE;26AWG;GN;1.30;PVC;7x0.16;UL1569		GREEN
12	1	WIRE;26AWG;GY;1.30;PVC;7x0.16;UL1569		GREY
13	1	WIRE;26AWG;PK;1.30;PVC;7x0.16;UL1569		PINK
14	1	WIRE;26AWG;RD;1.30;PVC;7x0.16;UL1569		RED
15	1	WIRE;26AWG;BK;1.30;PVC;7x0.16;UL1569		BLACK
16	1	WIRE;26AWG;VT;1.30;PVC;7x0.16;UL1569		VIOLET
17	1	WIRE;26AWG;WH;1.30;PVC;7x0.16;UL1569		WHITE
18	1	WIRE;26AWG;GY/PK;1.30;PVC;7x0.16;UL1569		GREY/PINK
19	1	WIRE;26AWG;RD/BU;1.30;PVC;7x0.16;UL1569		RED/BLUE
20	1	LABEL;SELF L.YELLOW(2.25X.75IN)	VINYL	YELLOW
21	-	POTTING MATERIAL	-	-

TABLE 5 - 4P D-CODE

ITEM	QTY	DESCRIPTION	MATERIAL	FINISH/COLOR
1	1	SHELL M16 FE BRASS FM L20 NI REC U12	BRASS	Ni
2	1	NUT M16X1.5 BRASS NI HEX		
3	1	GASKET OR NBR 11X2 BK	NBR	BLACK
4	1	GASKET OR FPM 7.1X1.35 RD 60	FPM	RED
5	1	INSERT M12 FE 4P DC CSE PUR BK UNSH	PUR	BLACK
6	4	CONTACT 10 FE STA AU CR WRA 0.14-0.50	BRASS	Au
7	1	WIRE;22AWG;BU;1.58;PVC;17x0.16;UL1569	PVC	BLUE
8	1	WIRE;22AWG;OG;1.58;PVC;17x0.16;UL1569		ORANGE
9	1	WIRE;22AWG;YE;1.58;PVC;17x0.16;UL1569		YELLOW
10	1	WIRE;22AWG;WH;1.58;PVC;17x0.16;UL1569		WHITE
11	1	LABEL;SELF L.YELLOW(2.25X.75IN)	VINYL	YELLOW
12	-	POTTING MATERIAL	-	-

THIS DRAWING CONTAINS INFORMATION THAT IS PROPRIETARY TO MOLEX ELECTRONIC TECHNOLOGIES, LLC AND SHOULD NOT BE USED WITHOUT WRITTEN PERMISSION

FUNCTIONAL SYMBOLS: FA = 0, FC = 0, FP = 0

DIVISIONAL SYMBOLS

DIMENSION UNITS: mm
SCALE: 1:1

GENERAL TOLERANCES (UNLESS SPECIFIED)

ANGULAR TOL	±	1.0 °
4 PLACES	±	
3 PLACES	±	
2 PLACES	±	0.05
1 PLACE	±	0.3
0 PLACES	±	0.5

DRAFT WHERE APPLICABLE MUST REMAIN WITHIN DIMENSIONS

CURRENT REV DESC: CHANGED MIN. TEMP. IN TABLE

EC NO: 736602
DRWN: RSCHIEBER 2023/01/30
CHK'D: RSILLER 2023/01/31
APPR: RSILLER 2023/01/31

INITIAL REVISION:
DRWN: FDAFERNER 2021/02/15
APPR: RSILLER 2022/07/12

THIRD ANGLE PROJECTION

DRAWING: A3-SIZE
SERIES: 120404

molex

REC U12 XP XC FE M16 FM WIR BRASS NI XM

PRODUCT CUSTOMER DRAWING

DOCUMENT NUMBER	DOC TYPE	DOC PART	REVISION
1204040021	PSD	000	A1

MATERIAL NUMBER	CUSTOMER	SHEET NUMBER
SEE PART LIST	GENERAL MARKET	2 OF 3

DOCUMENT STATUS	P1	RELEASE DATE	2023/01/31 08:21:39

FORMAT: master-Sealed-A3
REVISION: J
DATE: 2020/01/14

POLES	4 POLE	5 POLE	8 POLE	12 POLE	4 POLE
LAYOUT	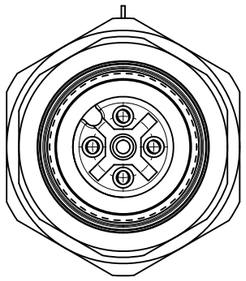	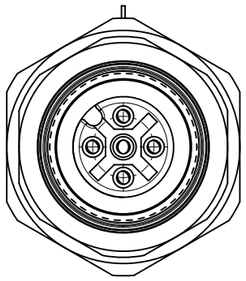	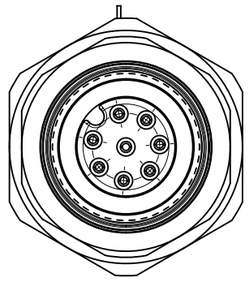	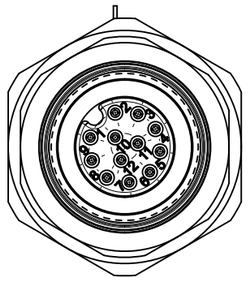	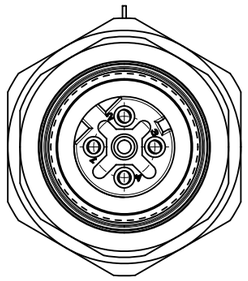
VOLTAGE RATING	250V	60V	30V	30V	250V
CODING	A - Code	A - Code	A - Code	A - Code	D - Code
AMPERE RATING	4A	4A	2A	1.5A	4A
PROTECTION CLASS CONNECTOR INTERFACE SHELL TO ENCLOSURE	IP 67/69K (in mated condition / when properly installed)				
OPERATING TEMP.	-40°C / 85°C				
UL CERTIFICATION	FILE NO. E152210				
CSA CERTIFICATION	FILE NO. LR6837				
WIRE LEAD	0.34 mm² PVC	0.34 mm² PVC	0.25 mm² PVC	0.14 mm² PVC	0.34 mm² PVC
PIN DIAMETER	1.0 mm	1.0 mm	0.8 mm	0.6 mm	1.0 mm
WIRE COLOR	ACCORDING TO IEC 60947-5-2		ACCORDING TO DIN 47100		ACC. TO IEC 60947-5-2

NOTE:
1. PANEL THICKNESS MAX. 5.3mm

RECOMMENDED PANEL CUTOUT

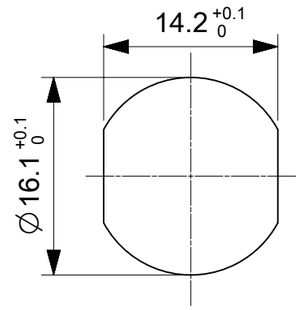

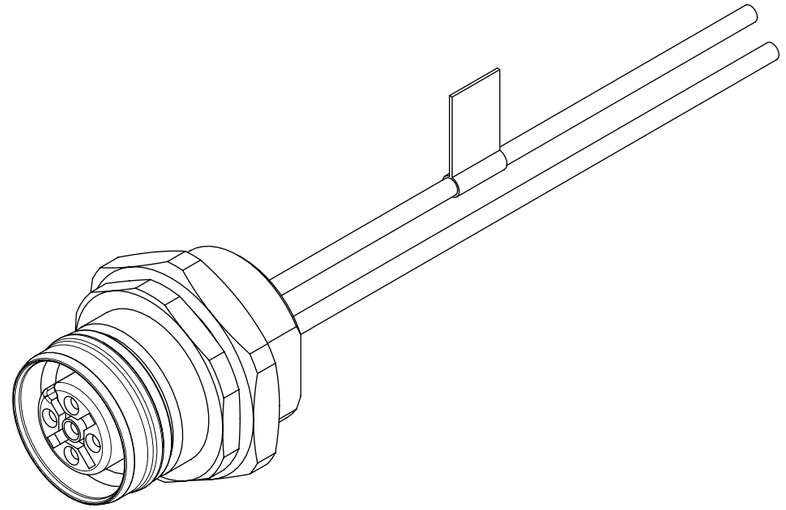

PART LIST 4P AC

MOLEX P/N	ENGINEERING NUMBER	DESCRIPTION	L [mm]	TOL
1204040021	YR4U20E03C300	REC U12 4P AC FE M16 FM WIR BRASS NI 0.3M	300	+40
1204040041	YR4U20E03C500	REC U12 4P AC FE M16 FM WIR BRASS NI 0.5M	500	+40

PART LIST 5P AC

MOLEX P/N	ENGINEERING NUMBER	DESCRIPTION	L [mm]	TOL
1204040022	YR5U20E03C300	REC U12 5P AC FE M16 FM WIR BRASS NI 0.3M	300	+40
1204040042	YR5U20E03C500	REC U12 5P AC FE M16 FM WIR BRASS NI 0.5M	500	+40

PART LIST 8P AC

MOLEX P/N	ENGINEERING NUMBER	DESCRIPTION	L [mm]	TOL
1204040023	YR8U20E02C300	REC U12 8P AC FE M16 FM WIR BRASS NI 0.3M	300	+40
1204040043	YR8U20E02C500	REC U12 8P AC FE M16 FM WIR BRASS NI 0.5M	500	+40

PART LIST 12P AC

MOLEX P/N	ENGINEERING NUMBER	DESCRIPTION	L [mm]	TOL
1204040024	YRCU20E01C300	REC U12 12P AC FE M16 FM WIR BRASS NI 0.3M	300	+40
1204040044	YRCU20E01C500	REC U12 12P AC FE M16 FM WIR BRASS NI 0.5M	500	+40

PART LIST 4P DC

MOLEX P/N	ENGINEERING NUMBER	DESCRIPTION	L [mm]	TOL
1204063003	ERYA2U20E03C300	REC U12 4P DC FE M16 FM WIR BRASS NI 0.3M	300	+40
1204063006	ERYA2U20E03C500	REC U12 4P DC FE M16 FM WIR BRASS NI 0.5M	500	+40

THIS DRAWING CONTAINS INFORMATION THAT IS PROPRIETARY TO MOLEX ELECTRONIC TECHNOLOGIES, LLC AND SHOULD NOT BE USED WITHOUT WRITTEN PERMISSION

FUNCTIONAL SYMBOLS: = 0 / = 0 / = 0
DIVISIONAL SYMBOLS

DIMENSION UNITS: mm
SCALE: 2:1
GENERAL TOLERANCES (UNLESS SPECIFIED)
ANGULAR TOL ± 1.0°
4 PLACES ±
3 PLACES ±
2 PLACES ± 0.05
1 PLACE ± 0.3
0 PLACES ± 0.5
DRAFT WHERE APPLICABLE MUST REMAIN WITHIN DIMENSIONS

CURRENT REV DESC: CHANGED MIN. TEMP. IN TABLE

EC NO: 736602
DRWN: RSCHIEBER 2023/01/30
CHK'D: RSILLER 2023/01/31
APPR: RSILLER 2023/01/31
INITIAL REVISION:
DRWN: FDAFERNER 2021/02/15
APPR: RSILLER 2022/07/12

THIRD ANGLE PROJECTION | DRAWING: A3-SIZE | SERIES: 120404

molex

REC U12 XP XC FE M16 FM WIR BRASS NI XM

PRODUCT CUSTOMER DRAWING

DOCUMENT NUMBER	DOC TYPE	DOC PART	REVISION
1204040021	PSD	000	A1

MATERIAL NUMBER	CUSTOMER	SHEET NUMBER
SEE PART LIST	GENERAL MARKET	3 OF 3

DOCUMENT STATUS	P1	RELEASE DATE	2023/01/31 08:21:39

FORMAT: master-shared-A3
REVISION: J
DATE: 2020/01/16