Features

- High isolation 3750 VRMS
- DC input with random-phase photo triac output
- Operating temperature range - 40 °C to 100 °C
- REACH & RoHS compliance
- Halogen free
- MSL class 1
- Regulatory Approvals
  - UL - UL1577
  - VDE - EN60747-5-5(VDE0884-5)
  - CQC - GB4943.1

Applications

- Solenoid/valve controls
- Lighting controls
- Motor controls
- Temperature controls
- Static AC power switches
- Solid state relays
- Interfacing microprocessors to 115 to 240VAC peripherals

Description

The MOC302X-S and MOC305X-S series combine an AlGaAs infrared emitting diode as the emitter which is optically coupled to a monolithic silicon random-phase photo triac in a plastic SOP4 package.

With the robust coplanar double mold structure, MOC302X-S/MOC305X-S series provide the most stable isolation feature.

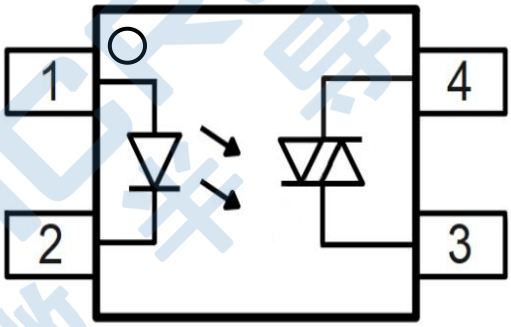

ORDERING INFORMATION

Outline	Part Number	Package	Marking	Packing	Packing Size	Quantity
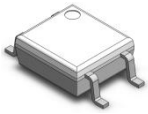	MOC302X-SVSE	SOP4	MOC30XX /YYWW Z	Reel	13 "	3000
	MOC305X-SVSE					

© ISOMICRON. 2023. All rights reserved

CONTENTS

Pin Configuration And Functions. 3
Absolute Maximum Ratings. 3
Electrical Optical Characteristics. 4
Characteristic Curves. 5
Test Circuits. 7
Package Dimensions. 8
Recommended Solder Mask 8
Carrier Tape Specifications 9
Ordering And Marking Information 10
Reflow Information 11
Temperature Profile Of Soldering. 12
Disclaimer 13

© ISOMICRON. 2023. All rights reserved

PIN CONFIGURATION AND FUNCTIONS

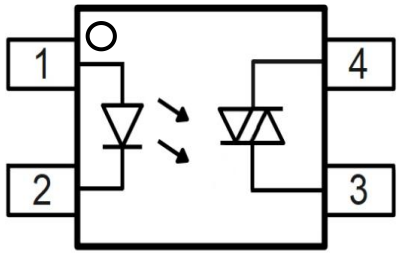

Pin	Name
1	Anode
2	Cathode
3	Terminal
4	Terminal

ABSOLUTE MAXIMUM RATINGS

Parameter		Symbol	Value	Unit	Note
INPUT					
Forward Current		I_F	60	mA	
Reverse Voltage		V_R	6	V	
Junction Temperature		T_j	125	°C	
Input Power Dissipation		P_I	100	mW	
OUTPUT					
Off-state Output Terminal Voltage	MOC302X-S	V_{DRM}	400	V	
	MOC305X-S		600		
Peak Repetitive Surge Current PW=100μs, 120pps		I_{TSM}	1	A	
Junction Temperature		T_j	125	°C	
Output Power Dissipation		P_O	300	mW	
COMMON					
Total Power Dissipation		P_{tot}	330	mW	
Isolation Voltage		V_{iso}	3750	Vrms	1
Operating Temperature		T_{opr}	-40~100	°C	
Storage Temperature		T_{stg}	-55~125	°C	
Soldering Temperature		T_{sol}	260	°C	2

Note 1. AC For 1 Minute, R.H. = 40 ~ 60%
Note 2. For 10 seconds

© ISOMICRON. 2023. All rights reserved

ELECTRICAL OPTICAL CHARACTERISTICS(T_a=25°C)

Parameter		Symbol	Min.	Typ.	Max.	Unit	Test Condition	Note
INPUT								
Forward Voltage		V_F	-	1.24	1.4	V	I_F=10mA	
Reverse Current		I_R	-	-	10	μA	V_R=6V	
Input Capacitance		C_{in}	-	8.5	250	pF	V=0, f=1kHz	
OUTPUT								
Peak Off-state Current, Either Direction		I_{DRM}	-	-	100	nA	V_{DRM}=Rated V_{DRM} I_F=0	3
Peak On-state Voltage, Either Direction		V_{TM}	-	1.58	2.5	V	I_{TM}=100mA	
Critical Rate of Rise of Off-state Voltage		d_V/d_t	1000	-	-	V/μs	V_{PEAK} =Rated V_{DRM}	4
TRANSFER CHARACTERISTICS								
LED Trigger Current	MOC3021、3051	I_{FT}	-	-	15	mA	Terminal Voltage = 3V I_{TM}=100mA	
	MOC3022、3052		-	-	10			
	MOC3023、3053		-	-	5			
Holding Current		I_H	-	257	-	μA		
Isolation Resistance		R_{iso}	10^12	10^14	-	Ω	DC500V, 40 ~ 60% R.H.	
Floating Capacitance		C_{IO}	-	0.4	1	pF	V=0, f=1MHz	

Note3. Test voltage must be applied within dv/dt rating.
Note4. Refer to Fig.15 & Fig.16

© ISOMICRON. 2023. All rights reserved

CHARACTERISTIC CURVES

Fig.1 Forward Current vs. Ambient Temperature

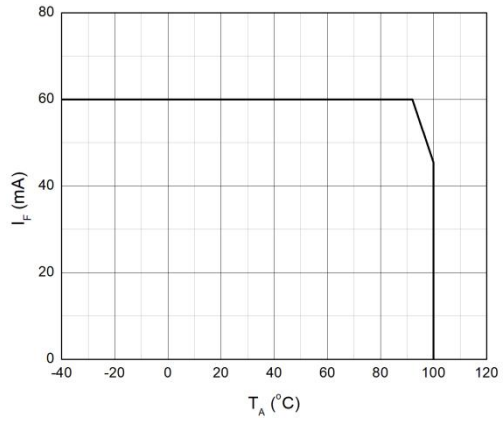

Fig.2 On-state Terminal Current vs. Ambient Temperature

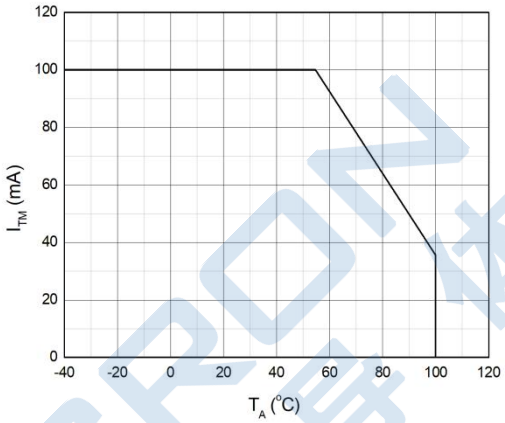

Fig.3 Forward Current vs. Forward Voltage

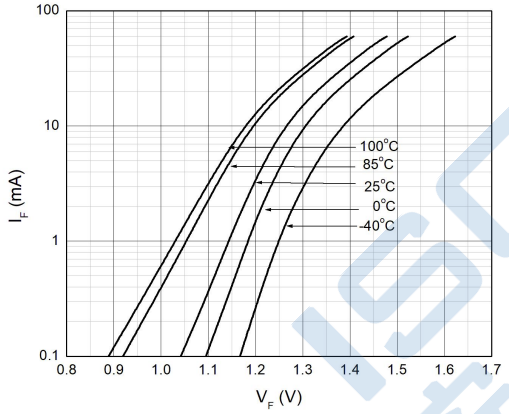

Fig.4 Off-state Terminal Current vs. Ambient Temperature

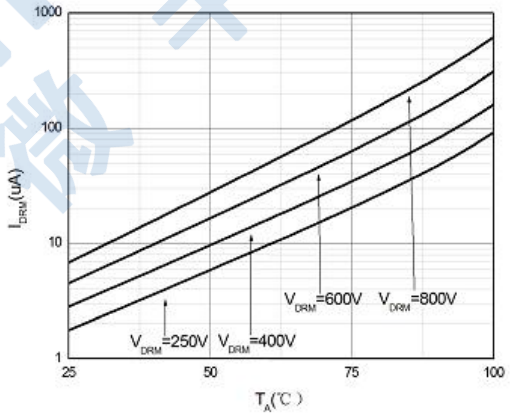

Fig.5 Normalized Off-state Terminal Voltage vs. Ambient Temperature

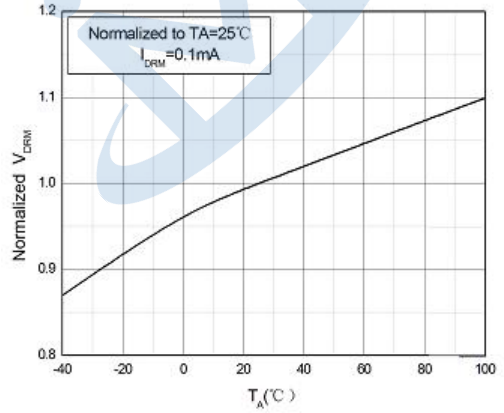

Fig.6 Normalized Trigger Current vs. LED Trigger Pulse Width

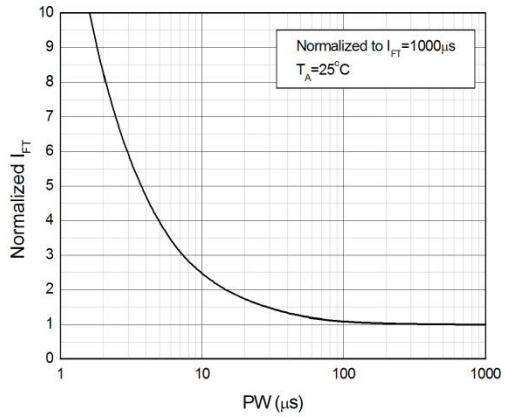

© ISOMICRON. 2023. All rights reserved

Fig.7 Normalized Trigger Current vs. Ambient Temperature

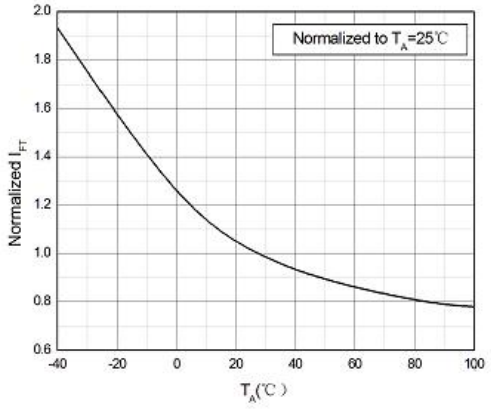

Fig.8 On-state Terminal Voltage vs. Ambient Temperature

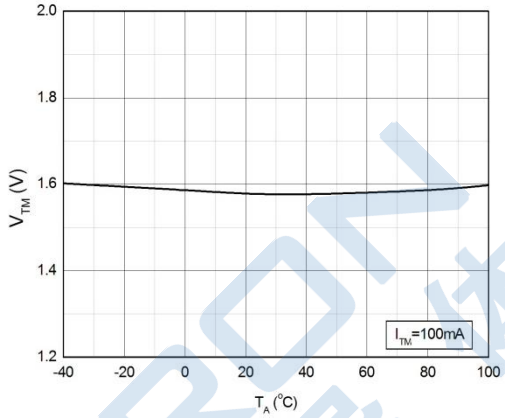

Fig.9 On-state Terminal Voltage vs. On-state Terminal Current

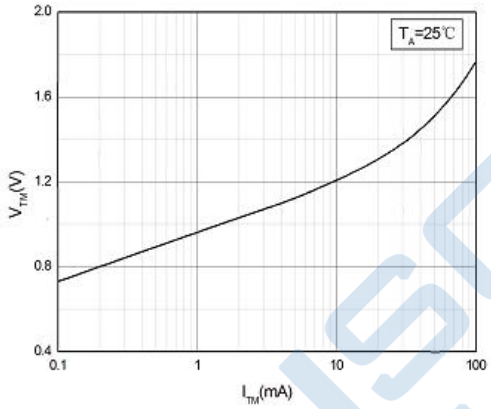

Fig.10 Holding Current vs. Ambient Temperature

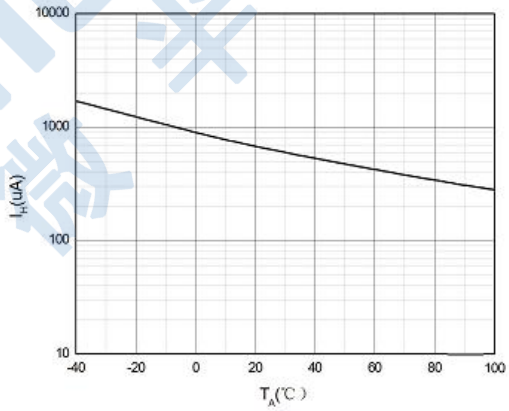

Fig.11 Turn On Time vs. Forward Current

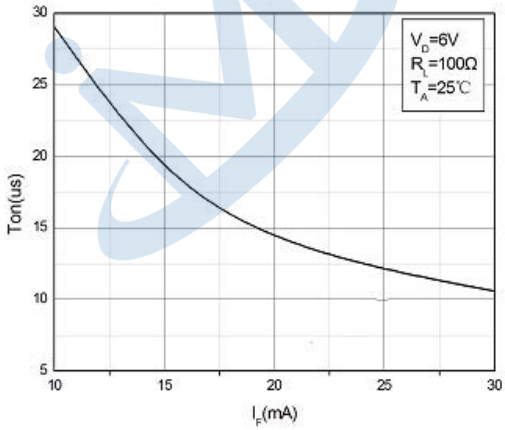

Fig.12 Turn On Time vs. Ambient Temperature

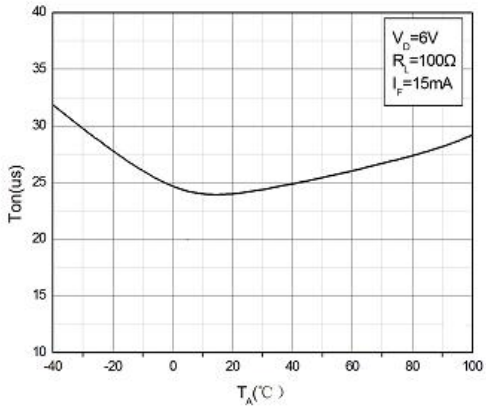

© ISOMICRON. 2023. All rights reserved

TEST CIRCUITS

Fig.13 Test Circuits of Turn On Time

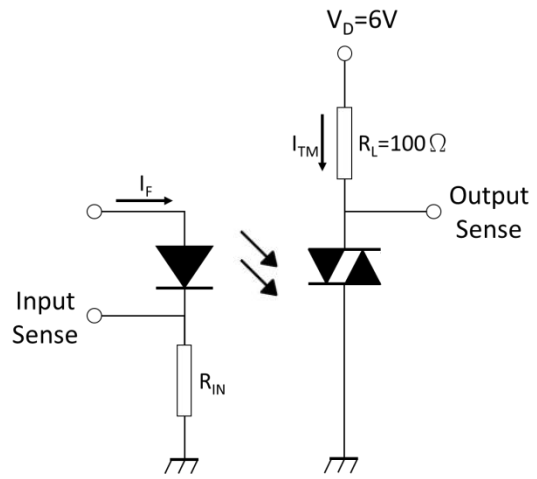

Fig.14 Waveforms of Turn On Time

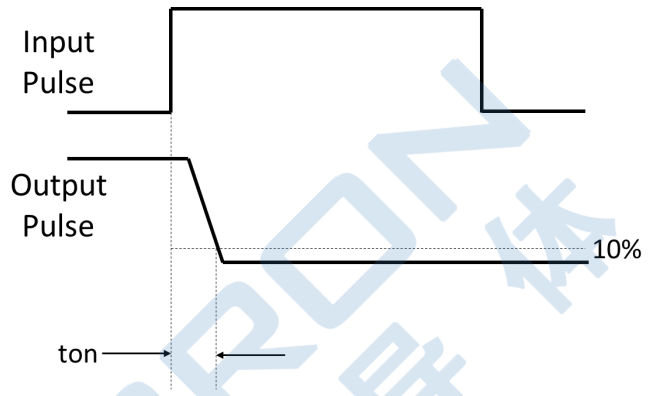

Fig.15 Test Circuits of dV/dt

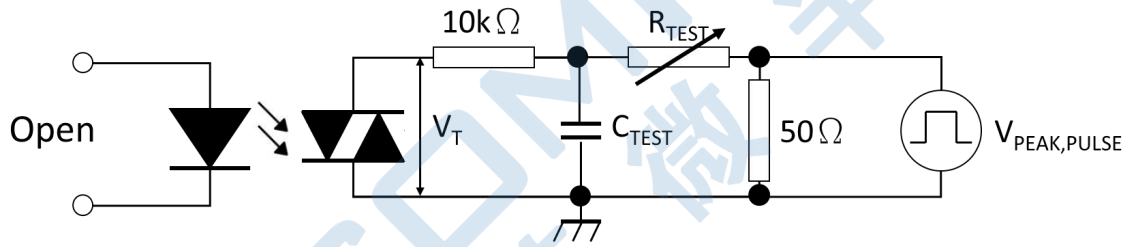

Fig.16 Waveforms of dV/dt

$$dv/dt = \frac{0.632 \times V_{PEAK}}{\tau_{RC}}$$

© ISOMICRON. 2023. All rights reserved

PACKAGE DIMENSIONS

Surface Mount (Low Profile) - (SOP4)

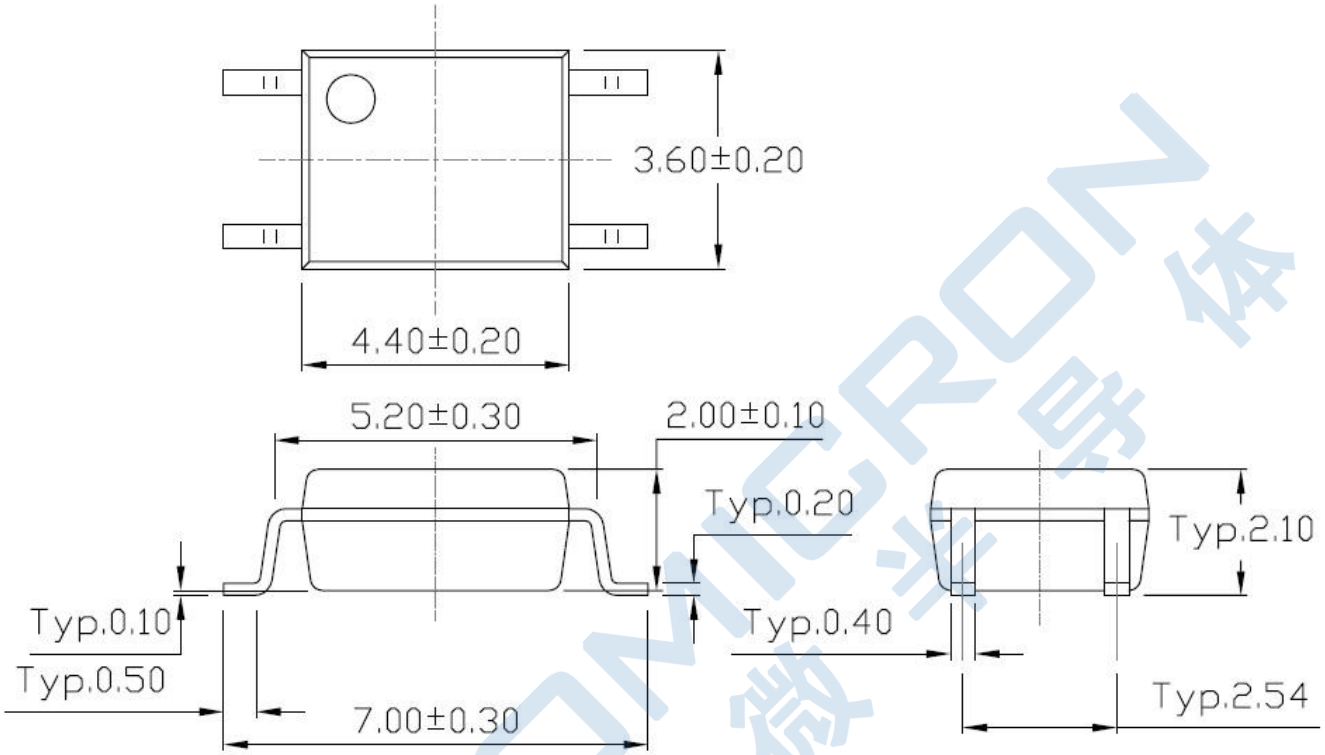

Recommended Solder Mask

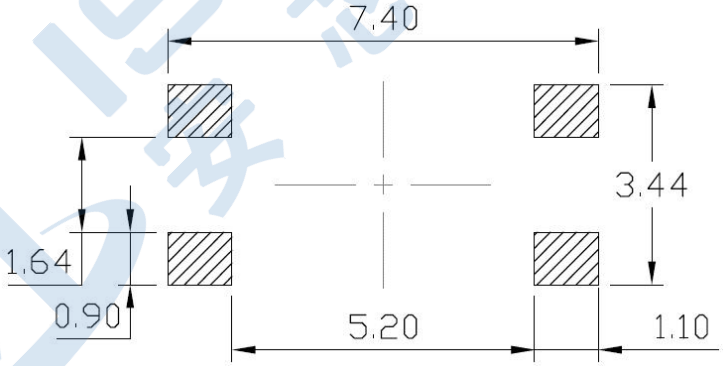

- **Dimensions in mm unless otherwise stated**

© ISOMICRON. 2023. All rights reserved

CARRIER TAPE SPECIFICATIONS

Option SM-SL

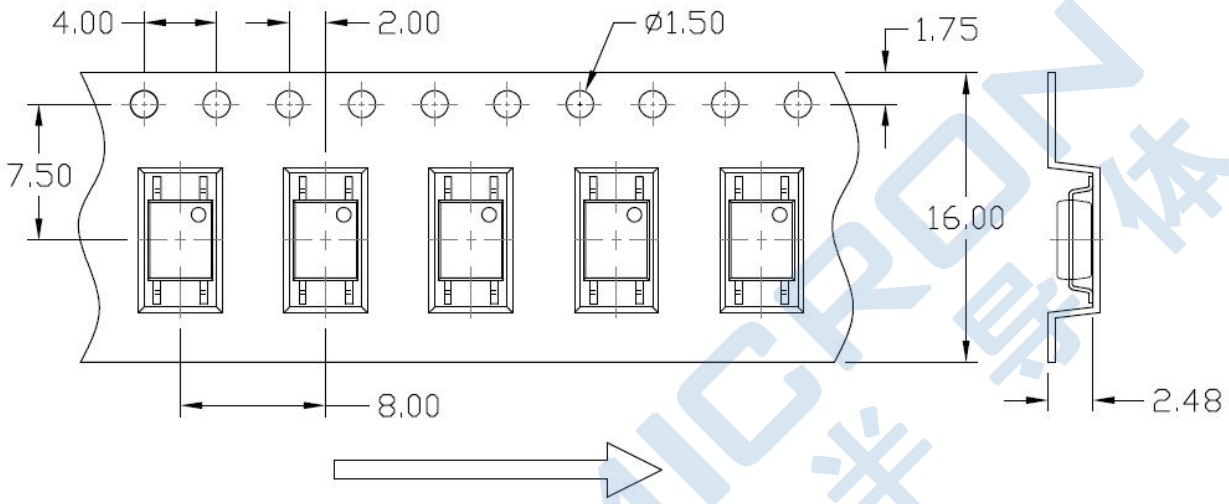

- **Dimensions in mm unless otherwise stated**

© ISOMICRON. 2023. All rights reserved

ORDERING AND MARKING INFORMATION

Marking Information

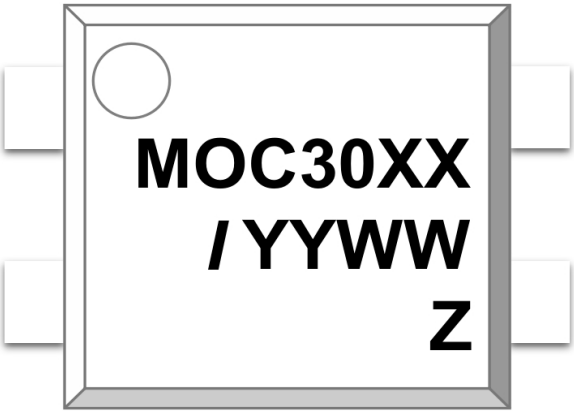

MOC	:	Product Series
30XX	:	Part Number
/	:	ISOMICRON
YY	:	Fiscal Year
WW	:	Work Week
Z	:	Manufacturing Code

Order Code

MOC 30XX - X X X X

Product Series

Part Number
301X,302X,305X

Package Option:
S: SOP4

Halogen Free:
E: Halogen-free,Lead-free
Z: Halogen, Lead-free

Lead Forming:
S: SM-SL

VDE Option:
V or None,
V-VDE approval

Packing Quantity

Option	Quantity	Quantity – Inner box	Quantity – Outer box
SM-SL	3000 Units/Reel	2 Reels/Inner box	5 Inner box/Outer box = 30k Units

© ISOMICRON. 2023. All rights reserved

REFLOW INFORMATION

Reflow Profile

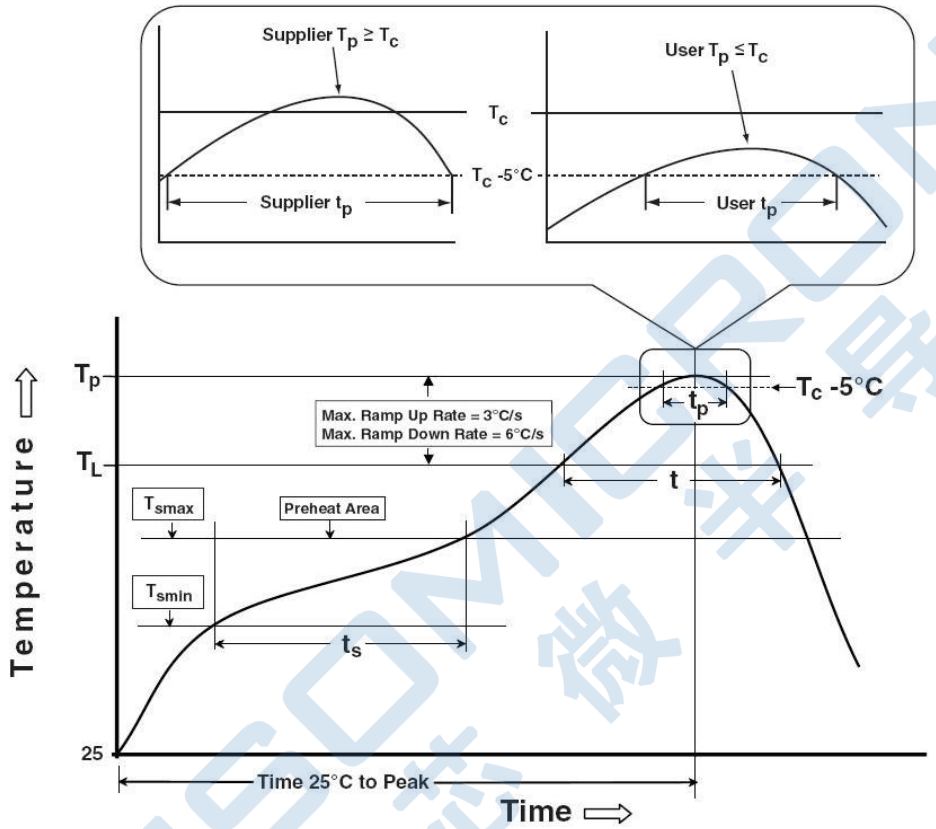

Profile Feature	Sn-Pb Assembly Profile	Pb-Free Assembly Profile
Temperature Min. (Tsmin)	100	150°C
Temperature Max. (Tsmax)	150	200°C
Time (ts) from (Tsmin to Tsmax)	60-120 seconds	60-120 seconds
Ramp-up Rate (tL to tP)	3°C/second max.	3°C/second max.
Liquidous Temperature (TL)	183°C	217°C
Time (tL) Maintained Above (TL)	60 – 150 seconds	60 – 150 seconds
Peak Body Package Temperature	235°C +0°C / -5°C	260°C +0°C / -5°C
Time (tP) within 5°C of 260°C	20 seconds	30 seconds
Ramp-down Rate (TP to TL)	6°C/second max	6°C/second max
Time 25°C to Peak Temperature	6 minutes max.	8 minutes max.

© ISOMICRON. 2023. All rights reserved

TEMPERATURE PROFILE OF SOLDERING

Wave Soldering (JESD22-A111 Compliant)

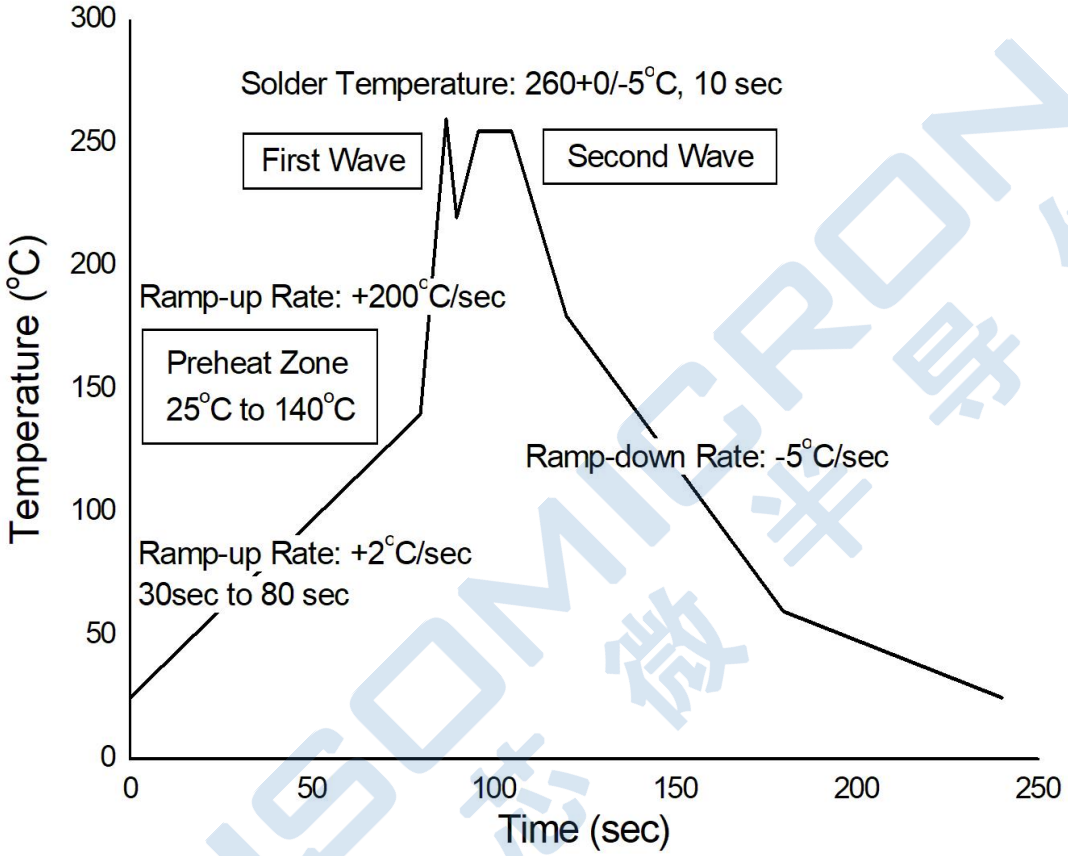

Hand Soldering By Soldering Iron	
Soldering Temperature	380+0/-5°C
Soldering Time	3 sec max.

- **One time soldering is recommended for all soldering method.**
- **Do not solder more than three times for IR reflow soldering.**

© ISOMICRON. 2023. All rights reserved

DISCLAIMER

- ISOMICRON is continually improving the quality, reliability, function and design. ISOMICRON reserves the right to make changes without further notices.
- The characteristic curves shown in this datasheet are representing typical performance which are not guaranteed.
- ISOMICRON makes no warranty, representation or guarantee regarding the suitability of the products for any particular purpose or the continuing production of any product. To the maximum extent permitted by applicable law, ISOMICRON disclaims (a) any and all liability arising out of the application or use of any product, (b) any and all liability, including without limitation special, consequential or incidental damages, and (c) any and all implied warranties, including warranties of fitness for particular
- The products shown in this publication are designed for the general use in electronic applications such as office automation, equipment, communications devices, audio/visual equipment, electrical application and instrumentation purpose, non-infringement and merchantability.
- This product is not intended to be used for military, aircraft, automotive, medical, life sustaining or lifesaving applications or any other application which can result in human injury or death.
- Please contact ISOMICRON sales agent for special application request.
- Immerge unit's body in solder paste is not recommended.
- Parameters provided in datasheets may vary in different applications and performance may vary over time. All operating parameters, including typical parameters, must be validated in each customer application by the customer's technical experts. Product specifications do not expand or otherwise modify ISOMICRON's terms and conditions of purchase, including but not limited to the warranty expressed therein.
- Discoloration might be occurred on the package surface after soldering, reflow or long-time use. It neither impacts the performance nor reliability.

© ISOMICRON. 2023. All rights reserved