FEMALE PLUG M12 STRAIGHT PNP LED

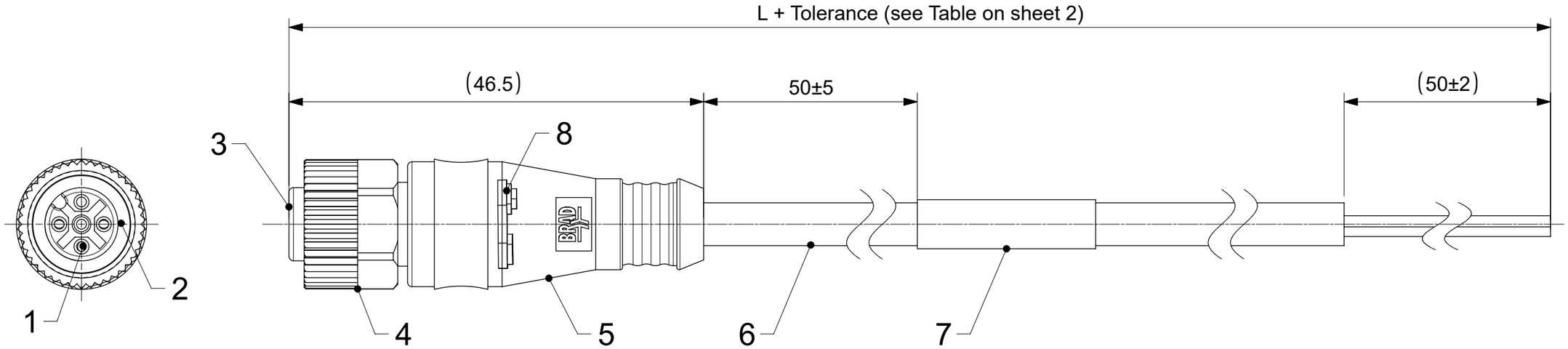

PNP WIRING

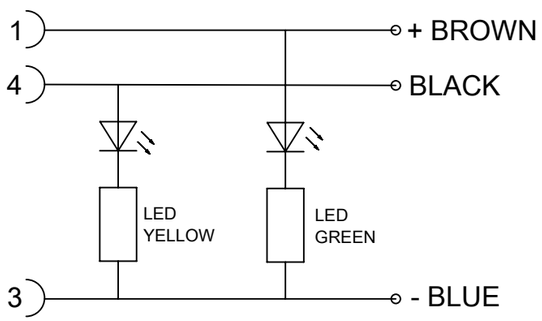

CONTACT POSITION
FRONT VIEW:

3 POLES

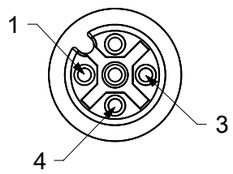

PIN	WIRE
1	BROWN
2	-
3	BLUE
4	BLACK
5	-

CODING REQUIRED TO IEC 61076-2-101

BOM

ITEM	QTY.	DESCRIPTION	MATERIAL	FINISH/COLOR
1	3	CONTACT M12 FEMALE	BRONZE	SELECTIVE GOLD OVER NICKEL
2	1	ORING	FPM	RED
3	1	INSERT FEMALE	PUR	BLACK
4	1	COUPLING NUT FEMALE	BRASS	NICKEL
5	-	OVERMOULD	TPU	TRANSPARENT
6	-	CABLE	SEE SHEET 2	---
7	1	LABEL	VINYL	YELLOW
8	1	PCB PNP	---	---

NOTES:
ELECTRICAL DATA :
VOLTAGE RATING : 10-30V DC
AMPERAGE RATING : 4A
INSULATION RESISTANCE : $10^8\Omega$ MIN
MATING CYCLES : MIN. 100
ENVIRONMENTAL :
PROTECTION : IP67 in mated and locked position
OPERATING TEMPERATURE : -25°C TO +85°C

THIS DRAWING CONTAINS INFORMATION THAT IS PROPRIETARY TO MOLEX ELECTRONIC TECHNOLOGIES, LLC AND SHOULD NOT BE USED WITHOUT WRITTEN PERMISSION

FUNCTIONAL SYMBOLS: FA = 0, FC = 0, FP = 0
DIVISIONAL SYMBOLS

DIMENSION UNITS	SCALE
mm	2:1

GENERAL TOLERANCES (UNLESS SPECIFIED)	
ANGULAR TOL	± 1.0 °
4 PLACES	±
3 PLACES	±
2 PLACES	± 0.05
1 PLACE	± 0.1
0 PLACES	± 0.2

DRAFT WHERE APPLICABLE MUST REMAIN WITHIN DIMENSIONS

CURRENT REV DESC: CHANGED DIMENSIONINGSTYLE OF OVERALL LENGTH TO "END TO END".ADDED NOTES.

EC NO: 789428
DRWN: AKABADI 2023/05/18
CHK'D: RSILLER 2024/07/02
APPR: RSILLER 2024/07/02

INITIAL REVISION:
DRWN: APAWLAK01 2016/05/09
APPR: MIWASIECZKO 2016/05/20

THIRD ANGLE PROJECTION | DRAWING: A3-SIZE | SERIES: 120067

molex

CSE M12 PNP 3P AC FE STR WSOR XM SE BK

PRODUCT CUSTOMER DRAWING

DOCUMENT NUMBER	DOC TYPE	DOC PART	REVISION
1200678454	PSD	000	B

MATERIAL NUMBER	CUSTOMER	SHEET NUMBER
SEE PARTLIST	GENERAL MARKET	1 OF 2

DOCUMENT STATUS	P1	RELEASE DATE	2024/07/02 09:18:14

FORMAT: master-Sized-A3
REVISION: J1
DATE: 2021/05/05

ENGINEERING NO. - NUMERICAL CODE (Available parts see PART LIST table. Others on request).

8	0	3	0	P	0	B	3	0	X	X	X	X

- 80 = M12x1 Single ended
- Poles: 3 = 3 Poles
- Heads style: 0P0 = Plug Female Straight PNP LED
- Cable: B30 = 0.34mm² TPU Black
- Units: M = Meter
- Length Examples:
  005 = 0.5 m
  010 = 1 m
  020 = 2 m
  050 = 5 m
  100 = 10 m
  150 = 15 m
  200 = 20 m

CABLE TYPE	NO. OF WIRES	CROSS SECTION	CABLE JACKET	UL	CSA	STATIC: TEMP. / BENDING RADIUS	DYNAMIC: TEMP. / BENDING RADIUS	DRAG CHAIN	SHIELD
B30	3	0.34mm²	TPU BLACK	UL STYLE 21215	YES	-40°C to +90°C, 5xD	-25°C to +80°C, 7.5xD	-	-

CABLE LENGTH TOLERANCES		
LENGTH	TOLERANCE	
shorter 1m	+40 mm	-0 mm
1m-5m	+60 mm	-0 mm
5m-10m	+80 mm	-0 mm
10m-20m	+140 mm	-0 mm
20m-30m	+160 mm	-0 mm
longer 30m	+1%	-0 mm

PART LIST

MOLEX PN	ENGINEERING No	L [mm]
3P CABLE B30		
1200678454	8030P0B30M010	1000
1200678455	8030P0B30M020	2000
1200678456	8030P0B30M030	3000
1200678431	8030P0B30M050	5000
1200678457	8030P0B30M100	10000

THIS DRAWING CONTAINS INFORMATION THAT IS PROPRIETARY TO MOLEX ELECTRONIC TECHNOLOGIES, LLC AND SHOULD NOT BE USED WITHOUT WRITTEN PERMISSION

FUNCTIONAL SYMBOLS: FA = 0, FC = 0, FD = 0
DIVISIONAL SYMBOLS

DIMENSION UNITS	SCALE
mm	1:1

GENERAL TOLERANCES (UNLESS SPECIFIED)

ANGULAR TOL	±	1.0 °
4 PLACES	±	
3 PLACES	±	
2 PLACES	±	0.05
1 PLACE	±	0.1
0 PLACES	±	0.2

DRAFT WHERE APPLICABLE MUST REMAIN WITHIN DIMENSIONS

CURRENT REV DESC: CHANGED DIMENSIONINGSTYLE OF OVERALL LENGTH TO "END TO END".ADDED NOTES.

EC NO: 789428
DRWN: AKABADI 2023/05/18
CHK'D: RSILLER 2024/07/02
APPR: RSILLER 2024/07/02

INITIAL REVISION:
DRWN: APAWLAK01 2016/05/09
APPR: MIWASIECZKO 2016/05/20

molex

CSE M12 PNP 3P AC FE STR WSOR XM SE BK

PRODUCT CUSTOMER DRAWING

DOCUMENT NUMBER	DOC TYPE	DOC PART	REVISION
1200678454	PSD	000	B

THIRD ANGLE PROJECTION	DRAWING	SERIES	MATERIAL NUMBER	CUSTOMER	SHEET NUMBER
	A3-SIZE	120067	SEE PARTLIST	GENERAL MARKET	2 OF 2

DOCUMENT STATUS	P1	RELEASE DATE	2024/07/02	09:18:14

FORMAT: master-Sized-A3
REVISION: J1
DATE: 2021/05/05