Copyright FCI.

FCIconnect.com

PRODUCT NUMBER	PITCH
H5xx30x000J0G	3.81 mm

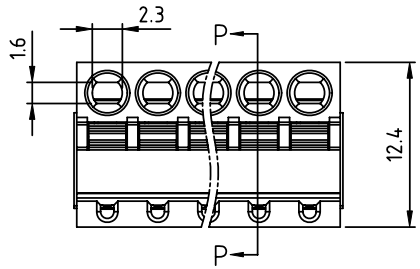

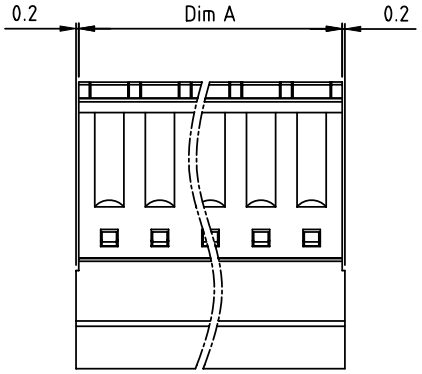

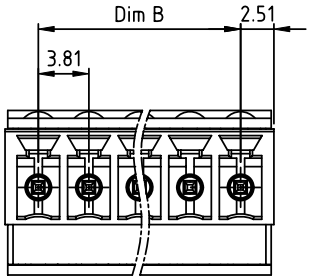

Dimension

DIM A	N×3.81+0.8
DIM B	(N-1)×3.81

N=Number of poles

POLES	Tolerance
2p-6p	±0.10
7p-12p	±0.15
13p-18p	±0.20
19p-24p	±0.30

PART NO.: H5 xx 3 0 x 0 00J0 G

Solid block
No. of poles
02 2 poles
03 3 poles
... ...
24 24 poles

Color
0 Black (RAL9005)
2 Red (RAL3001/D)
3 Orange(RAL2011/P)
4 Yellow(RAL1018/A)
5 Green(RAL6018/T)
6 Blue (RAL5015/A)
8 Grey(RAL7035/D)
9 White(RAL1102)
C Green(RAL6018/U)

RoHS compliant
(lead<4%)
In copper Alloy

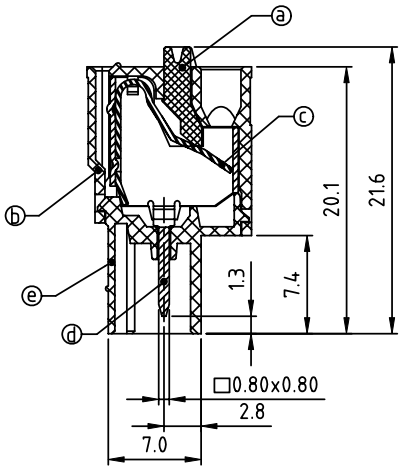

SECTION P-P

Material:
- Item ⓐ Terminal lever: Thermoplastic (UL94V-0) Orange (RAL2001/P)
- Item ⓑ Top body: Thermoplastic (UL94V-0)
- Item ⓒ Spring clamp: Stainless steel
- Item ⓓ Male contact pin: Phbz.Tin plated
- Item ⓔ Bottom body: Thermoplastic (UL94V-0)

Electrical:	cULus
Voltage rating:	300V
Current rating:	4A
Wire range:	
Solid wire(AWG):	16-28
Stranded wire(AWG):	16-28
Wire strip length:	9-10 mm
Withstanding Voltage:	1.6 KV
Operating temperature:	-40°C to +115°C
Safety Approval:	c UL us

mat'l. code				surface ASME Y14.5	tolerance ASME Y14.5	projection	product family TERMINAL BLOCK
ltr	ecn no	dr	date	tolerances unless otherwise specified			title
				angles	linear X.±0.5 / X.X±0.3 / X.XX±0.1	MM	TERMINAL BLOCK SPRING CLAMP,PLUGGABLE PLUG MALE CONNECTOR
				X°±1°		scale	
				dr	EVIN ZHONG 051614	FCI	dwg no H5xx30x000J0G — sheet 1 of 1 — size A4
				engr	EVIN ZHONG 051614		
				chr	HANKE FENG 051614		
				appd	SHI JUN 051614		type CUSTOMER Drawing
sheet index	revision	A					
	sheet	1					

Downloaded from Arrow.com.