Jul.1.2024 Copyright 2024 HIROSE ELECTRIC CO., LTD. All Rights Reserved.
In case of consideration for using Automotive equipment / device which demand high reliability, kindly contact our sales window correspondents.

	COUNT	DESCRIPTION OF REVISIONS	BY	CHKD	DATE		COUNT	DESCRIPTION OF REVISIONS	BY	CHKD	DATE
△					. .	△					. .
△					. .	△					. .
△					. .	△					. .

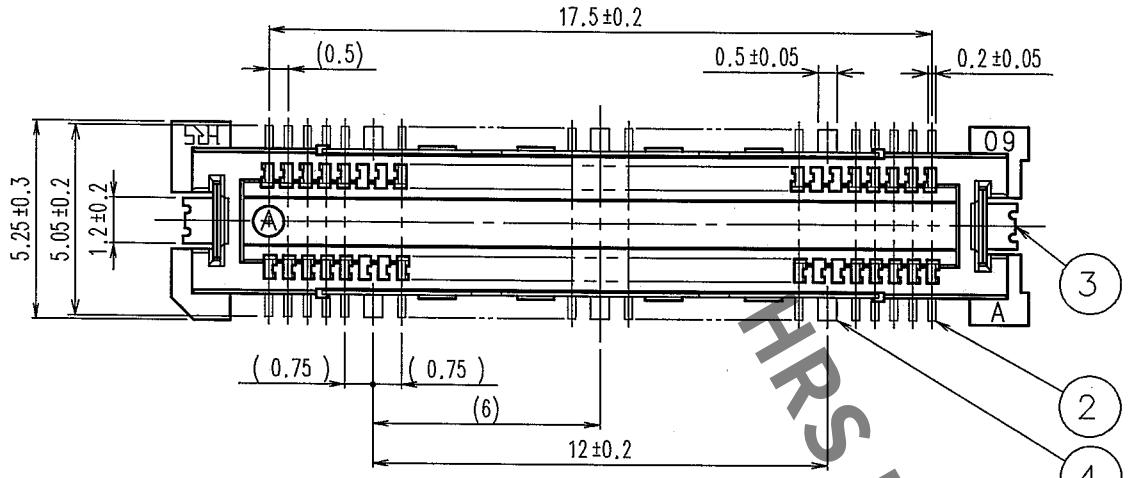

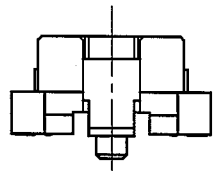

RECOMMENDED LAND PATTERN DIMENSION OF PCB

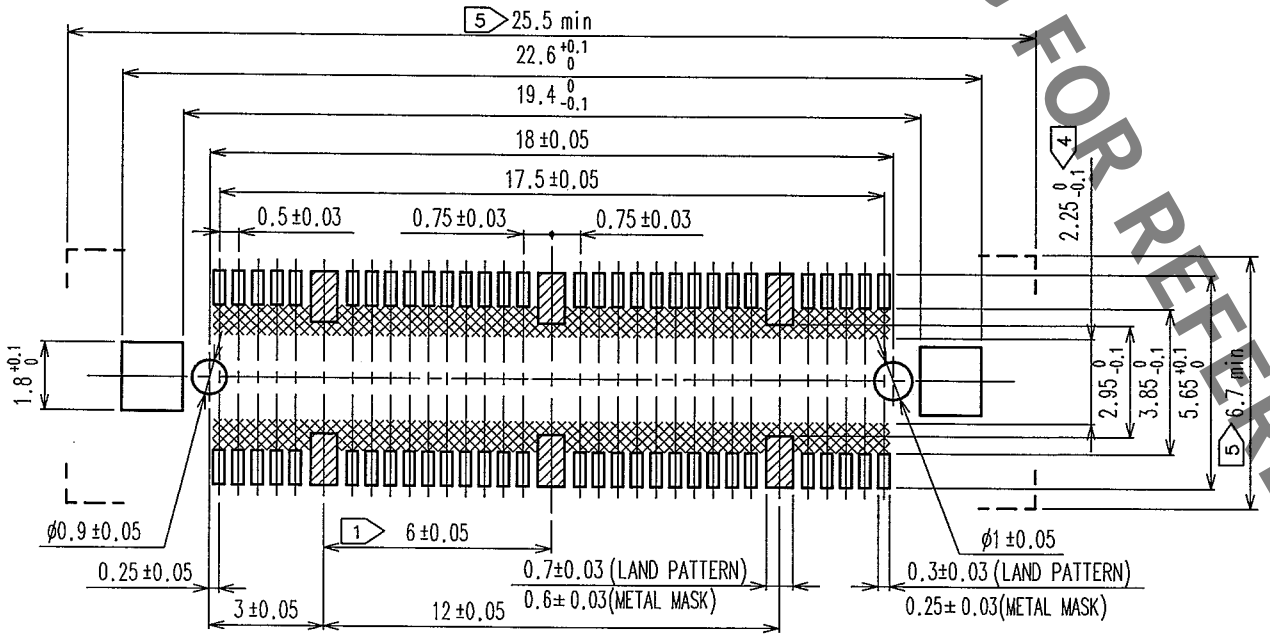

SIGNAL PORTION CROSS SECTION (10:1)

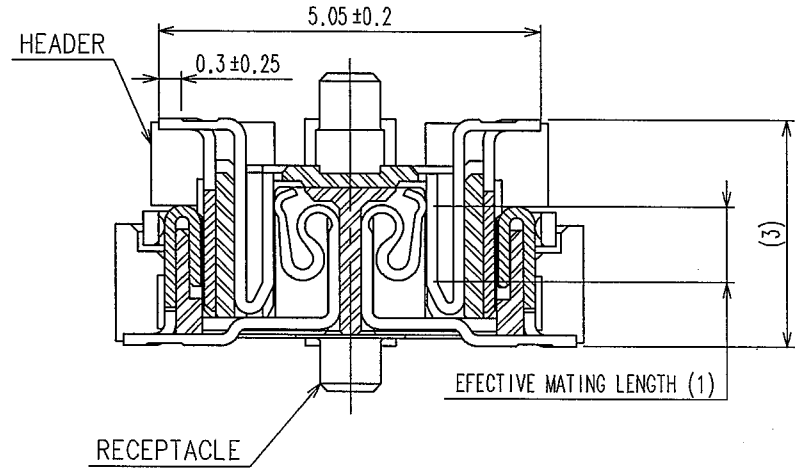

GROUND PORTION CROSS SECTION (10:1)

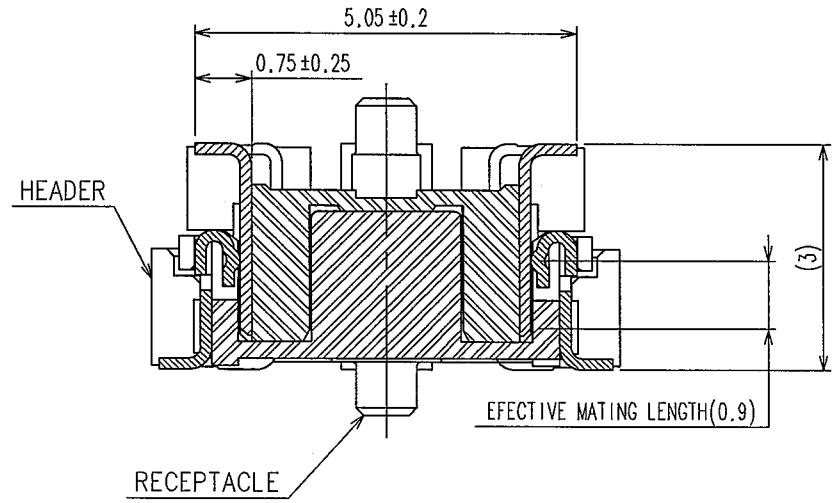

HRS DRAWING FOR REFERENCE

NOTES
1. 6 HATCHED ▨ PARTS: GROUND CIRUIT.
2. SMT LEAD-COPLANARITY: 0.1 MAX.
3. THIS PRODUCT HAS NO POLARITY TO PATTERN FOR MOUNTING.
4. MAKE SURE WIDTH OF PATTERN IS WITHIN THAT OF LAND, OR LEAD MAY TOUCH PATTERN. (THIS APPLIES TO HATCHED ▩ AREA.)
5. DO NOT MOUNT OTHER DEVICES ONTO [ ] AREA, OR MATING PAIR CANNOT BE MATED.
6. DIMENSION IN PARENTHESES ARE FOR REFERENCE.

NO.	MATERIAL	FINISH, REMARKS	NO.	MATERIAL	FINISH, REMARKS
3,4	PHOSPHOR BRONZE	TIN PLATING	2	COPPER ALLOY	CONTACT AREA : GOLD 0.1μm min.
1	LCP	BEIGE UL94V-0			MOUNTING AREA : GOLD FLASH
					UNDER PLATING : NICKEL 1μm min.

CODE NO.(OLD)	DRAWN	DESIGNED	CHECKED	APPROVED	RELEASED
CL	T.YANAGISAWA '05.10.11	T. Noda '05.10.12	H. Ozawa '05.10.12	H. Okawa 05.10.12	

SCALE 5 : 1	DRAWING NO. EDC3-152614-25	PART NO. FX11A-60P/6-SV0.5(71)
UNITS mm	HRS HIROSE ELECTRIC CO.,LTD.	CODE NO. CL573-0602-4-71 1/1

TO

FORM NO.229