REVISIONS					
REV	ECO	DESCRIPTION	DATE	BY	APPR
A1	-	TECHNICAL DATA SHEET RELEASE	-	-	-
A2	-	ADDED DESCRIPTION	10/27/17	-	-

TECHNICAL DATA:

1) MATERIALS:
   CONNECTOR: MB2CKN0900 CHECKMATE
   OVERMOLD: TPE
   CABLE: KA-56647

2) ELECTRICAL:
   INSULATION RESISTANCE (MIN): 5000M OHMS
   DIELECTRIC TEST VOLTAGE: 2200V

3) MECHANICAL:
   TEMPERATURE RANGE: -40°C TO 105°C
   PROTECTION: IP67 (MATED CONDITION)
   MATING CYCLES: >500
   VIBRATION RESISTANCE PER MIL-STD-202 METHOD 204
   THERMAL SHOCK PER MIL-STD-202 METHOD 207
   48 HOUR SALT SPRAY PER MIL-STD-202 METHOD 101

4) CABLE SPECIFICATIONS:
• NOMINAL O.D., 0.55" (14.2MM), JACKET COLOR: ORANGE DESINA RAL 2003, JACKET MATERIAL: POLYURETHANE (PUR).
• Electrical Resistance at 20°C: ≤ 59,0 Ω/km (Section 0,34mm²)
≤ 19,5 Ω/km (Section 1,00mm²)
≤ 7,98 Ω/km (Section 2,50mm²)
• Insulation Resistance 20°C: ≤ 500 MΩxkm
• Test Voltage: 3 kVa.c.
• Operating Voltage: 1000Va.c.
• Capacitance 800 ÷ 1000Hz: 45 ± 15 pF/m - (2xAWG22)ST/SN (BUS)
• Characteristic Impedance at 10MHz: 110 ± 10 Ω - (2xAWG22)ST/SN (BUS)
• Capacitance 800 ÷ 1000Hz: ≤ 90 pF/m (Conductor/Conductor) 4x2,5mm²
≤ 150 pF/m (Conductor/Shield) 4x2,5mm²
• Temperature Range: -40°C to +80°C (static, dynamic and storage)
• Minimum Bending Radius: 5 x Ø (Static Use) - 7 x Ø (Dynamic Use)
• Max Speed: 300 m/min
• Max Acceleration: 50 m/s²
• Max Torsion: ± 30°/m
• Chain length: 20m
• Max Number of cycles: 5,000,000

Flame Resistance:
• CEI 20-35-1-2, EN 50265-1-2, IEC 60332-1-2, UL VW-1, CSA FT1

Halogen Free:
• CEI 20-37, EN 50267-2-1, IEC 60754-1

Hydrocarbons and oil resistance:
• UL1581, VDE 0472 part 803 A/B, HD 22.10 S1, CNOMO E.03.40.150N

5) RoHS COMPLIANT

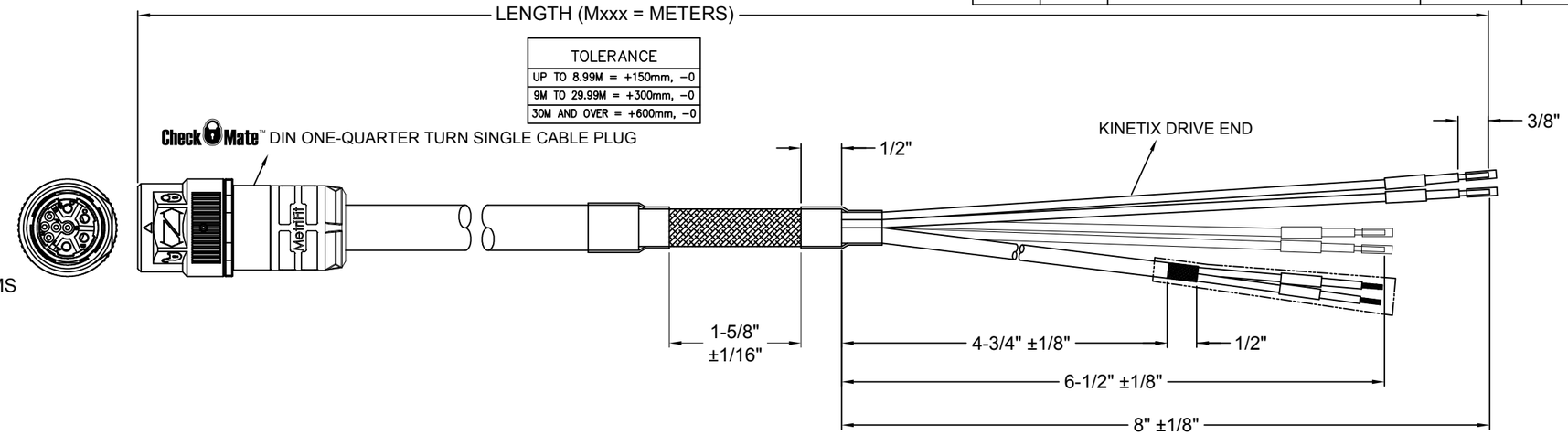

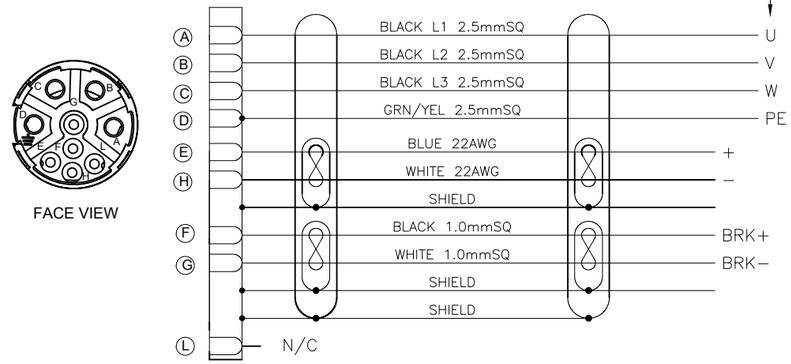

ROCKWELL P/N	AMPHENOL P/N
2090-CSBM1DF-14AAxx	P30626-Mxx
2090-CSBM1DF-14AA03	P30626-M3
2090-CSBM1DF-14AA05	P30626-M5
2090-CSBM1DF-14AA09	P30626-M9
2090-CSBM1DF-14AA10	P30626-M10
2090-CSBM1DF-14AA15	P30626-M15
2090-CSBM1DF-14AA20	P30626-M20

Risk of Electrical Shock
Do Not Disconnect Under Load.
Risque de chocs electriques
Ne pas debrancher sous tension.
WARNING

DO NOT SCALE DRAWING

QUANTITY	PART NUMBER	DESCRIPTION	ITEM

MATERIALS LIST

UNLESS OTHERWISE SPECIFIED
1) All dimensions are in metric(mm).
2) Tolerances are as follows:
1 PL DEC ±0.30 | Fractions ±1/64
2 PL DEC ±0.15 | Angles ±1°
3 PL DEC ±0.08
3) Note reference = X

MATERIAL SPECIFICATIONS:

PROCESS SPECIFICATIONS:

NEXT ASS'Y:

SIGNATURES		DATE
DRAWN:	MRF	10AUG15
CHECKED:	AA	27OCT17
ENGINEER:	RO	
APPROVAL:	WS	27OCT17
CUSTOMER:		

THIS DRAWING IS SUPPLIED FOR INFORMATION ONLY. DESIGN FEATURES, SPECIFICATIONS AND PERFORMANCE DATA SHOWN HEREON ARE THE PROPERTY OF THE AMPHENOL CORPORATION. NO RIGHTS OF REPRODUCTION ARE IMPLIED. ALL DIMENSIONS ARE SUBJECT TO NORMAL MANUFACTURING VARIATIONS.

Amphenol

Sine Systems - www.sineco.com
44724 Morley Drive
Clinton Township, MI 48036

SINGLE MOTOR CABLE, M23 CHECKMATE, 1000V HYBRID CABLE WITH 4 POWER (14AWG), 2 FEEDBACK (DIGITAL COMMUNICATION) AND 2 BRAKE CONDUCTORS, DRIVE-END FLYING LEADS

SIZE	TYPE	DWG NO:	REVISION
	C-	P30626-Mxx	A2

SCALE: NONE | C-P30626 | SHEET 1 OF 1

TITLE: CABLE ASSEMBLY

DWG NO: C-P30626-Mxx | REV: A1 | SH: 1 | OF: 1