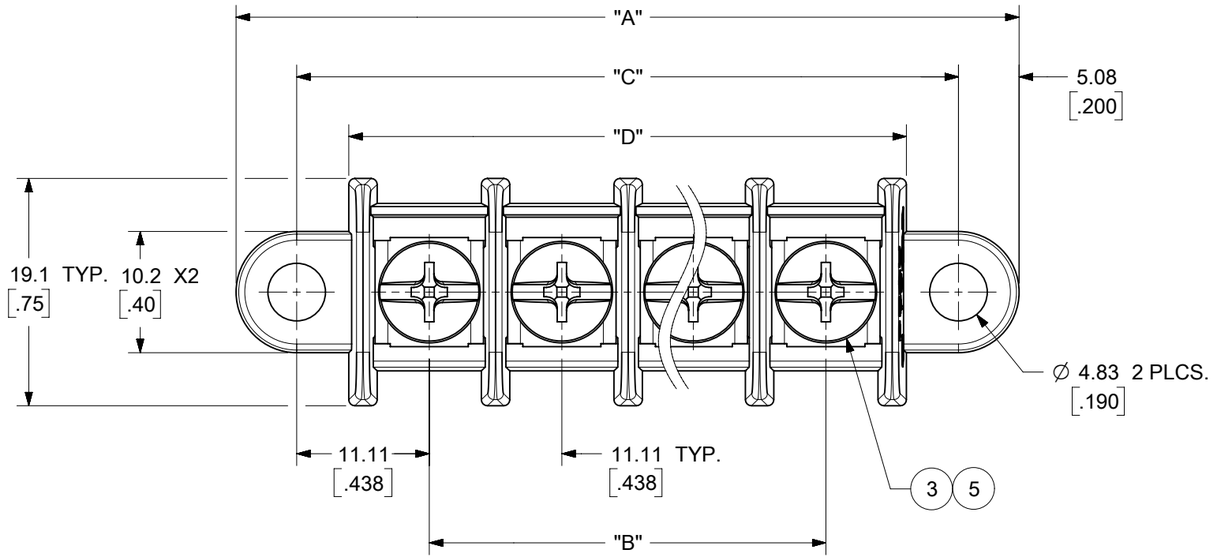

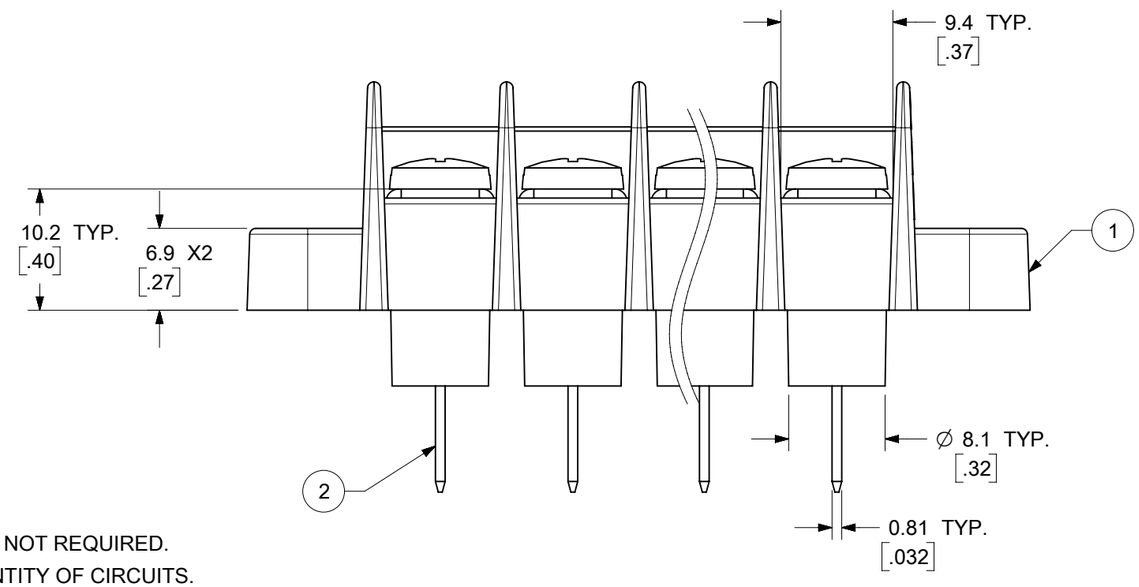

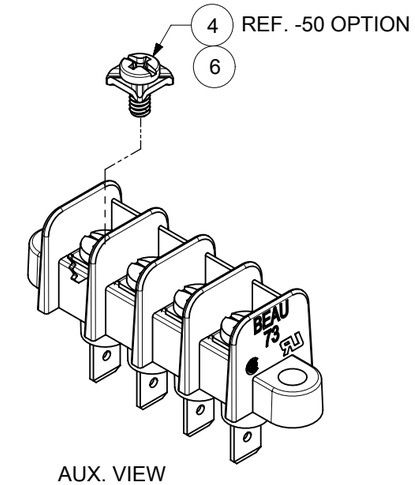

AUX. VIEW
SCALE 1:1
4 CIRCUIT SHOWN

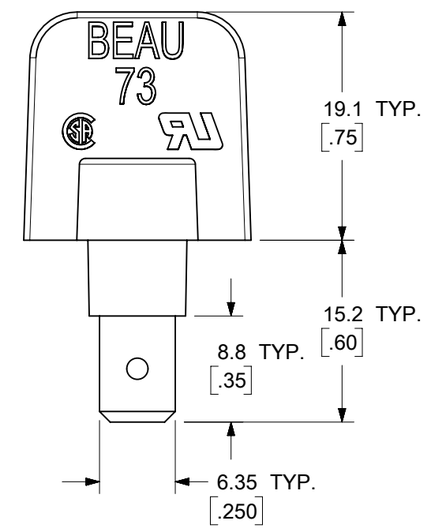

NOTES:
1. MATERIAL: SEE TABLE.
2. FINISHES: SEE TABLE.
3. PRODUCT SPECIFICATION: NOT REQUIRED.
4. "XX" REFERS TO THE QUANTITY OF CIRCUITS.
5. MUST BE ROHS COMPLIANT.

ITEM	QTY.	DESCRIPTION	MATERIAL	FINISH	
6	XX	SCREW AND WASHER, #8-32, PAN HEAD (-A-50 OPT)	STEEL	ZN, CLEAR CHROMATE	A1
5	XX	SCREW, #8-32, BIND. HEAD (-A OPT)	STEEL	ZN, CLEAR CHROMATE	A1
4	XX	SCREW AND WASHER, #6-32, PAN HEAD (-50 OPT)	STEEL	ZN, CLEAR CHROMATE	
3	XX	SCREW, #6-32, BIND. HEAD (STD OPT)	STEEL	ZN, CLEAR CHROMATE	
2	XX	TERMINAL, QUICK CONNECT	BRASS	TIN PLATED	
1	1	CS INSULATOR, SINGLE ROW	POLYESTER (PBT)	BLACK	

DOCUMENT STATUS | P1 | RELEASE DATE | 2020/12/09 17:34:57

THIS DRAWING CONTAINS INFORMATION THAT IS PROPRIETARY TO MOLEX ELECTRONIC TECHNOLOGIES, LLC AND SHOULD NOT BE USED WITHOUT WRITTEN PERMISSION

FUNCTIONAL SYMBOLS: EW = 0, EC = 0, EP = 0
DIVISIONAL SYMBOLS

DIMENSION UNITS: MM/INCH
SCALE: 2:1

GENERAL TOLERANCES (UNLESS SPECIFIED)

	MM	INCH
4 PLACES	± ---	± ---
3 PLACES	± ---	± 0.005
2 PLACES	± 0.13	± 0.01
1 PLACE	± 0.3	± ---
0 PLACES	± ---	± ---
ANGULAR TOL	± 2.0 °	

DRAFT WHERE APPLICABLE MUST REMAIN WITHIN DIMENSIONS

CURRENT REV DESC: MIGRATED TO ECTR. ADDED ITEM# 5 & 6

EC NO: 647916
DRWN: ABENJAMINLW 2020/10/27
CHK'D: DACHAMMER 2020/10/27
APPR: JFMURPHY 2020/12/09

INITIAL REVISION:
DRWN: JENCINAS 2008/09/01
APPR: JMACNEIL 2008/09/10

THIRD ANGLE PROJECTION | DRAWING: B-SIZE | SERIES: 38735

molex

11.11MM [.438] SR BTS, CS FAST TAB ASY

PRODUCT CUSTOMER DRAWING

DOCUMENT NUMBER	DOC TYPE	DOC PART	REVISION
SD-38735-005	PSD	001	A1

MATERIAL NUMBER	CUSTOMER	SHEET NUMBER
SEE SHEET-2	GENERAL MARKET	1 OF 2

FORMAT: Eng-lega-master-tb-prod-B
REVISION: E
DATE: 2020/01/14

NO. OF CIRCUITS "XX"	DIM. "A"		DIM. "B"		DIM. "C"		DIM. "D"		ASSEMBLY MATERIAL NO. (STD OPTION)	ASSEMBLY MATERIAL NO. (-50 OPTION)	ASSEMBLY MATERIAL NO. (-A OPTION)	ASSEMBLY MATERIAL NO. (-A-50 OPTION)
	mm	INCH	mm	INCH	mm	INCH	mm	INCH				
2	43.5	1.71	11.11	.438	33.34	1.313	24.5	.97	387351002	387351402	387356402	387356602
3	54.6	2.15	22.23	.875	44.45	1.750	35.7	1.40	387351003	387351403	387356403	387356603
4	65.7	2.59	33.34	1.313	55.56	2.188	46.8	1.84	387351004	387351404	387356404	387356604
5	76.8	3.03	44.45	1.750	66.68	2.625	57.9	2.28	387351005	387351405	387356405	387356605
6	87.9	3.46	55.56	2.188	77.79	3.063	69.0	2.72	387351006	387351406	387356406	387356606
7	99.1	3.90	66.68	2.625	88.90	3.500	80.1	3.15	387351007	387351407	387356407	387356607
8	110.2	4.34	77.79	3.063	100.01	3.938	91.2	3.59	387351008	387351408	387356408	387356608
9	121.3	4.78	88.90	3.500	111.13	4.375	102.3	4.03	387351009	387351409	387356409	387356609
10	132.4	5.21	100.01	3.938	122.24	4.813	113.4	4.47	387351010	387351410	387356410	387356610
11	143.5	5.65	111.13	4.375	133.35	5.250	124.6	4.90	387351011	387351411	387356411	387356611
12	154.6	6.09	122.24	4.813	144.46	5.688	135.7	5.34	387351012	387351412	387356412	387356612
13	165.7	6.53	133.35	5.250	155.58	6.125	146.8	5.78	387351013	387351413	387356413	387356613
14	176.8	6.96	144.46	5.688	166.69	6.563	157.9	6.22	387351014	387351414	387356414	387356614
15	188.0	7.40	155.58	6.125	177.80	7.000	169.0	6.65	387351015	387351415	387356415	387356615
16	199.1	7.84	166.69	6.563	188.91	7.438	180.1	7.09	387351016	387351416	387356416	387356616
17	210.2	8.28	177.80	7.000	200.03	7.875	191.2	7.53	387351017	387351417	387356417	387356617
18	221.3	8.71	188.91	7.438	211.14	8.313	202.3	7.97	387351018	387351418	387356418	387356618
19	232.4	9.15	200.03	7.875	222.25	8.750	213.5	8.40	387351019	387351419	387356419	387356619
20	243.5	9.59	211.14	8.313	233.36	9.188	224.6	8.84	387351020	387351420	387356420	387356620
21	254.6	10.03	222.25	8.750	244.48	9.625	235.7	9.28	387351021	387351421	387356421	387356621
22	265.7	10.46	233.36	9.188	255.59	10.063	246.8	9.72	387351022	387351422	387356422	387356622
23	276.9	10.90	244.48	9.625	266.70	10.500	257.9	10.15	387351023	387351423	387356423	387356623
24	288.0	11.34	255.59	10.063	277.81	10.938	269.0	10.59	387351024	387351424	387356424	387356624
25	299.1	11.78	266.70	10.500	288.93	11.375	280.1	11.03	387351025	387351425	387356425	387356625
26	310.2	12.21	277.81	10.938	300.04	11.813	291.2	11.47	387351026	387351426	387356426	387356626
27	321.3	12.65	288.93	11.375	311.15	12.250	302.4	11.90	387351027	387351427	387356427	387356627
28	332.4	13.09	300.04	11.813	322.26	12.688	313.5	12.34	387351028	387351428	387356428	387356628
29	343.5	13.53	311.15	12.250	333.38	13.125	324.6	12.78	387351029	387351429	387356429	387356629
30	354.6	13.96	322.26	12.688	344.49	13.563	335.7	13.22	387351030	387351430	387356430	387356630
											A1	A1

THIS DRAWING CONTAINS INFORMATION THAT IS PROPRIETARY TO MOLEX ELECTRONIC TECHNOLOGIES, LLC AND SHOULD NOT BE USED WITHOUT WRITTEN PERMISSION

FUNCTIONAL SYMBOLS: EA = 0; EC = 0; EP = 0

DIVISIONAL SYMBOLS

DIMENSION UNITS: MM/INCH

SCALE: 2:1

GENERAL TOLERANCES (UNLESS SPECIFIED)

	MM	INCH
4 PLACES	± ---	± ---
3 PLACES	± ---	± 0.005
2 PLACES	± 0.13	± 0.01
1 PLACE	± 0.3	± ---
0 PLACES	± ---	± ---
ANGULAR TOL	± 2.0 °	

DRAFT WHERE APPLICABLE MUST REMAIN WITHIN DIMENSIONS

CURRENT REV DESC: MIGRATED TO ECTR. ADDED ITEM# 5 & 6

EC NO: 647916
DRWN: ABENJAMINLW 2020/10/27
CHK'D: DACHAMMER 2020/10/27
APPR: JFMURPHY 2020/12/09

INITIAL REVISION:
DRWN: JENCINAS 2008/09/01
APPR: JMACNEIL 2008/09/10

THIRD ANGLE PROJECTION

DRAWING: B-SIZE

SERIES: 38735

molex

11.11MM [.438] SR BTS, CS FAST TAB ASY

PRODUCT CUSTOMER DRAWING

DOCUMENT NUMBER	DOC TYPE	DOC PART	REVISION
SD-38735-005	PSD	001	A1

MATERIAL NUMBER	CUSTOMER	SHEET NUMBER
SEE CHART	GENERAL MARKET	2 OF 2

DOCUMENT STATUS	P1	RELEASE DATE	2020/12/09 17:34:57

FORMAT: Eng-lega-master-tb-prod-B
REVISION: E
DATE: 2020/01/14

NO. OF CIRCUITS "XX"	DIM. "A"		DIM. "B"		DIM. "C"		DIM. "D"		ASSEMBLY MATERIAL NO. (STD OPTION)	ASSEMBLY MATERIAL NO. (-50 OPTION)
	mm	INCH	mm	INCH	mm	INCH	mm	INCH		
2	43.5	1.71	11.11	0.438	33.34	1.313	24.5	0.97	387351002	387351402
3	54.6	2.15	22.23	0.875	44.45	1.750	35.7	1.40	387351003	387351403
4	65.7	2.59	33.34	1.313	55.56	2.188	46.8	1.84	387351004	387351404
5	76.8	3.03	44.45	1.750	66.68	2.625	57.9	2.28	387351005	387351405
6	87.9	3.46	55.56	2.188	77.79	3.063	69.0	2.72	387351006	387351406
7	99.1	3.90	66.68	2.625	88.90	3.500	80.1	3.15	387351007	387351407
8	110.2	4.34	77.79	3.063	100.01	3.938	91.2	3.59	387351008	387351408
9	121.3	4.78	88.90	3.500	111.13	4.375	102.3	4.03	387351009	387351409
10	132.4	5.21	100.01	3.938	122.24	4.813	113.4	4.47	387351010	387351410
11	143.5	5.65	111.13	4.375	133.35	5.250	124.6	4.90	387351011	387351411
12	154.6	6.09	122.24	4.813	144.46	5.688	135.7	5.34	387351012	387351412
13	165.7	6.53	133.35	5.250	155.58	6.125	146.8	5.78	387351013	387351413
14	176.8	6.96	144.46	5.688	166.69	6.563	157.9	6.22	387351014	387351414
15	188.0	7.40	155.58	6.125	177.80	7.000	169.0	6.65	387351015	387351415
16	199.1	7.84	166.69	6.563	188.91	7.438	180.1	7.09	387351016	387351416
17	210.2	8.28	177.80	7.000	200.03	7.875	191.2	7.53	387351017	387351417
18	221.3	8.71	188.91	7.438	211.14	8.313	202.3	7.97	387351018	387351418
19	232.4	9.15	200.03	7.875	222.25	8.750	213.5	8.40	387351019	387351419
20	243.5	9.59	211.14	8.313	233.36	9.188	224.6	8.84	387351020	387351420
21	254.6	10.03	222.25	8.750	244.48	9.625	235.7	9.28	387351021	387351421
22	265.7	10.46	233.36	9.188	255.59	10.063	246.8	9.72	387351022	387351422
23	276.9	10.90	244.48	9.625	266.70	10.500	257.9	10.15	387351023	387351423
24	288.0	11.34	255.59	10.063	277.81	10.938	269.0	10.59	387351024	387351424
25	299.1	11.78	266.70	10.500	288.93	11.375	280.1	11.03	387351025	387351425
26	310.2	12.21	277.81	10.938	300.04	11.813	291.2	11.47	387351026	387351426
27	321.3	12.65	288.93	11.375	311.15	12.250	302.4	11.90	387351027	387351427
28	332.4	13.09	300.04	11.813	322.26	12.688	313.5	12.34	387351028	387351428
29	343.5	13.53	311.15	12.250	333.38	13.125	324.6	12.78	387351029	387351429
30	354.6	13.96	322.26	12.688	344.49	13.563	335.7	13.22	387351030	387351430

SEE SHEET ONE
EC NO: WNA2009-0148
DRWN: JENCINAS 2008/09/01
CH'KD: CYORK 2008/09/09
APPR: JMACNEIL 2008/09/10
DESCRIPTION
A
REV

QUALITY SYMBOLS
▼=0
(C)=0

GENERAL TOLERANCES (UNLESS SPECIFIED)

	mm	INCH
4 PLACES	± ---	± ---
3 PLACES	± ---	± .005
2 PLACES	± 0.13	± .01
1 PLACE	± 0.3	± ---
ANGULAR ± 2 °		

DRAFT WHERE APPLICABLE MUST REMAIN WITHIN DIMENSIONS

DIMENSION STYLE: MM/IN
SCALE: 2:1
DESIGN UNITS: INCH
THIRD ANGLE PROJECTION

DRAWN BY: JENCINAS DATE: 2008/08/27
CHECKED BY: CYORK DATE: 2008/08/28
APPROVED BY: JMACNEIL DATE: 2008/08/29

TITLE: 11.11MM [.438] SR BTS, CS FAST TAB ASY

MOLEX INCORPORATED

MATERIAL NO.: SEE CHART
DOCUMENT NO.: SD-38735-005
SHEET NO.: 2 OF 2
SIZE: B

THIS DRAWING CONTAINS INFORMATION THAT IS PROPRIETARY TO MOLEX INCORPORATED AND SHOULD NOT BE USED WITHOUT WRITTEN PERMISSION