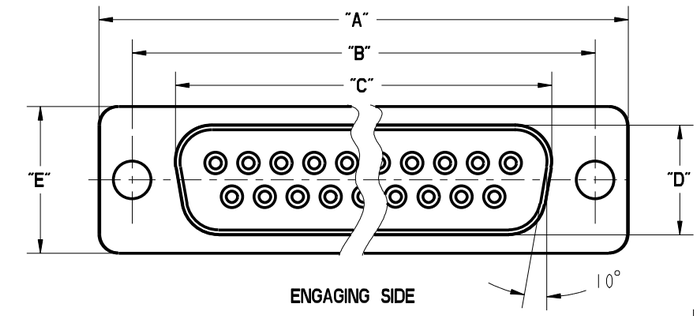

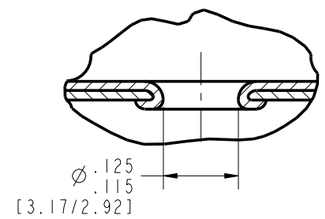

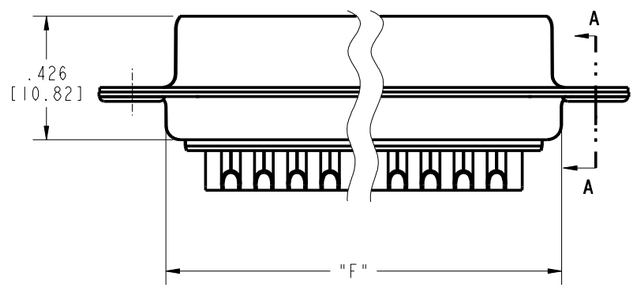

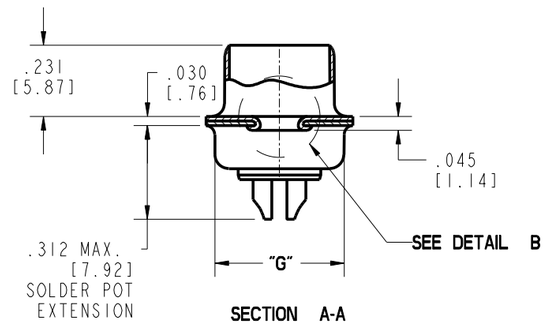

NOTES:

1. SPECIFICATIONS:

ELECTRICAL:
WITHSTANDING VOLTAGE: MINIMUM 1250 V RMS @ SEA LEVEL
INSULATION RESISTANCE: INITIAL 5000 MEGOHMS MAXIMUM,
1000 MEGOHMS MIN. AFTER ENVIRONMENTAL TESTING.
CONTACT RATING: 5 AMPS
CONTACT RESISTANCE: 2.7 MILLIOHMS MAX.

MATERIALS:

INSULATOR: WHITE UL94V-O RATED GLASS FILLED POLYESTER

CONTACT: COPPER ALLOY
CONTACT AREA PLATING: GOLD OVER NICKEL,

CONNECTOR SHELL: STEEL, PLATING ZINC WITH CLEAR CHROMATE.

ENVIRONMENTAL:

OPERATING TEMPERATURE: -65°C TO +125°C

TERMINATION:

SOLDER POTS ACCOMODATE # 20 AWG STRANDED WIRE MAX.

2. DIMENSIONS IN [ ] ARE IN MILLIMETERS.

DRAWING REVISIONS

REV	DOCUMENT	APP	DATE
A	DO 05-1094	AKB	1/7/06
B	ECN 06E468		

NUMBER OF POSITIONS	SELECTIVE GOLD FLASH PLATING (.120" [3.05] MTG. HOLES		DIMENSION							FRONT MOUNTING HOLE DIMENSIONS		REAR MOUNTING HOLE DIMENSIONS	
	PART NO.	FACTORY NO.	"A"	"B"	"C"	"D"	"E"	"F"	"G"	"X"	"Y"	"X"	"Y"
9	DEH-9S	702 11 09 001	1.213 [30.81]	.984 [24.99]	.640 [16.26]	.308 [7.82]	.494 [12.55]	.759 [19.28]	.422 [10.72]	.874 [22.20]	.513 [13.03]	.806 [20.47]	.449 [11.40]
15	DAH-15S	702 11 15 001	1.541 [39.14]	1.312 [33.32]	.968 [24.59]			1.083 [27.51]		1.202 [30.53]		1.134 [28.80]	
25	DBH-25S	702 11 25 001	2.088 53.04]	1.852 [47.04]	1.508 [38.30]			1.629 [41.38]		1.743 [44.27]		1.674 [42.52]	
37	DCH-37S	702 11 37 001	2.729 [69.32]	2.500 [64.50]	2.156 [54.76]			2.272 [57.71]		2.391 [60.73]		2.326 [59.08]	
50	DDH-50S	702 11 50 001	2.635 [66.93]	2.406 [61.11]	2.062 [52.37]	.420 [10.67]	.605 [15.37]	2.178 [55.32]	.534 [13.56]	2.297 [58.34]	.623 [15.82]	2.218 [56.34]	.555 [14.10]

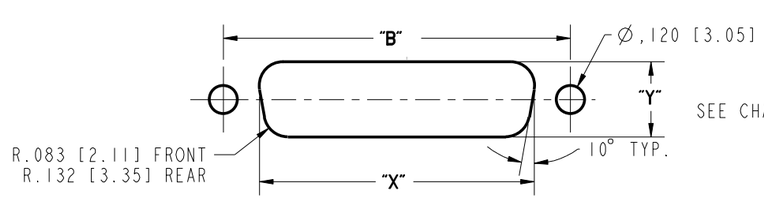

RECOMENDED MTG.HOLE LAYOUT
SEE CHART FOR FRONT AND REAR MTG.DIMENSIONS

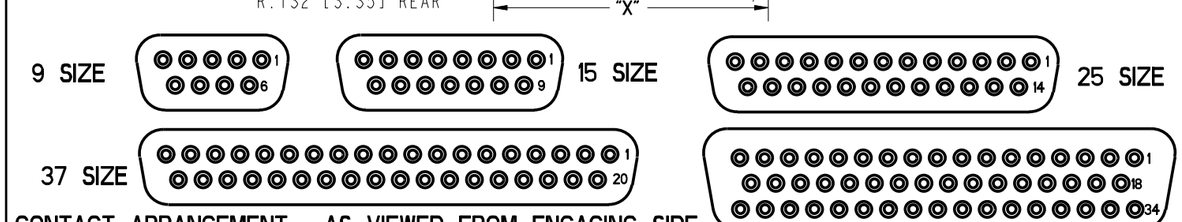

CONTACT ARRANGEMENT - AS VIEWED FROM ENGAGING SIDE

ROHS COMPLIANT

UNITS ENGLISH	PRO/E	Cinch		MODELED BY: V.SKUZA
DO NOT SCALE DRAWING	DRAWN BY V.SKUZA	DATE 06/10/05	TITLE D-SUB SOLDER CUP CONNECTOR SOCKET ASS'Y(.120" MTG HOLES)	1700 FINLEY RD LOMBARD, IL. 60148
[redacted]	DESIGN ENGINEER A.BALI	06/10/05	MATERIAL	CONTROL SPEC NUMBER
	DESIGN ENGINEERING MGR. A.SHAH	07/09/05	MATERIAL SPEC NUMBER / FINISH	PROJECT NUMBER C14716
THIS DOCUMENT IS THE PROPERTY OF CINCH. NEITHER THIS DOCUMENT NOR ANY OF THE INFORMATION CONTAINED IN IT MAY BE DUPLICATED OR DISCLOSED WITHOUT PRIOR WRITTEN CONSENT OF CINCH.	MFG. ENGINEERING J.OCEGUERA	07/07/05	CAD FILE NUMBER DXH-XXS / DRAWING NUMBER	D*H-XXS
	QUALITY ASSURANCE A. VAZQUEZ	07/06/05	CAGE IDENT NO. 71785 / SIZE B / SCALE 1:1	SHEET 1 OF 1