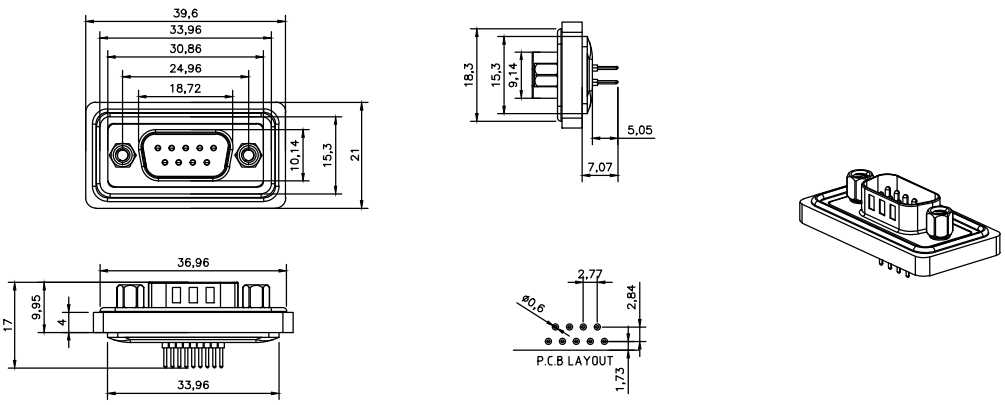

产品材料	
外壳材料及镀层	
胶体	
防火等级	
插针材料	
插针镀层	
六角螺母	

电气性能	
额定电流	
耐电压	
接触电阻	
绝缘电阻	
工作温度	

声明：请贵司在2个工作日内确认并回传图纸，过期未回传的，默认为贵司已确认合格

业务确认

客户		图号		日期	制图	审核
料号				2024-06-12	蔡家俊	
品名				单位：mm	Size:A4	

RoHS

GENERAL TOLERANCE (UNLESS SPECIFIED): N/A

THIRD ANGLE

DWN		CAZN正成	
CHK			
APVD		TITLE	E-DB1-M9-PPA-N
UNIT MM	REV A	PART NO	c190301-00006
SIZE A4	SHEET 1 OF 1	DRAWING NO	

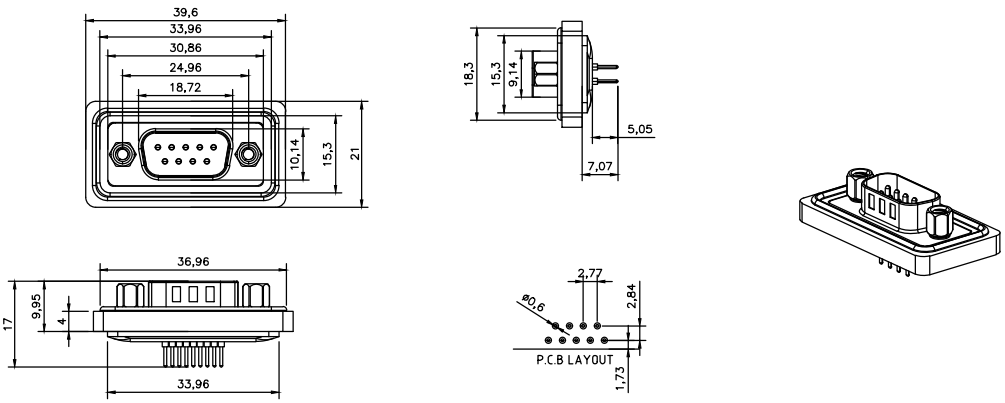

Product materials	
Shell material and coating	
Colloid	
Fire rating	
CONTACT MATERIAL	
CONTACT FINISH	
RIVETED INSERT	

Electrical performance	
Rated current	
Voltage withstand	
Contact resistance	
Insulation resistance	
Working temperature	

Tatement: Please confirm and return the drawings within 2 working days. If the drawings are not returned after the expiration date, the default is that you have been confirmed to be qualified.

Business confirmation

Customer		DWN NO		DATE	DWN	APVD
P/N				2024-06-12	蔡家俊	
Product Name				UNIT: mm	Size:A4	

RoHS

GENERAL TOLERANCE (UNLESS SPECIFIED)
≤10 ±0.1
<10~≤20 ±0.2
<20~≤50 ±0.5
Angle ±3°

THIRD ANGLE

DWN		CAZN正成	
CHK			
APVD		TITLE	E-DB1-M9-PPA-N
UNIT MM	REV A	PART NO	c190301-00006
SIZE A4	SHEET 1 OF 1	DRAWING NO	