THIS DRAWING IS UNPUBLISHED. RELEASED FOR PUBLICATION 20
© COPYRIGHT 20 BY - ALL RIGHTS RESERVED.

PART NUMBER	REV	FIRST USED	TYPE	A	B	C	D
2185239-1	B	2309502-1	1X2 W SLOPE	44.5	1°	32.2	27.6
2185239-2	B	2317010-1, 2227728-1, 2227728-2, 2227728-3	1X2	41	0°	32.2	27.6
2185239-3	B	1761014-3	1X2	44.5	0°	32.2	27.6
2185239-4	B	1658744-3	1X4	44.5	0°	60.7	56.1
2185239-5	B	1761015-3	1X6	44.5	0°	89.2	84.6
2185239-6	B	2007498-2	1X6 W SLOPE	44.5	1°	89.2	84.6
2185239-7	B	2300275-1	1X4	41	0°	60.7	56.1
2185239-8	B	2170165-1	1X2	43.3	0°	32.2	27.6
2185239-9	B	2007135-3	1X4	43.3	0°	60.7	56.1
1-2185239-0	B	2324567-1	1X3	41.6	0°	46.5	40.08
1-2185239-1	B	2284170-3	1X5	43.3	0°	74.95	71.75
1-2185239-2	C	2347114-1	1X6	43.3	0°	89.2	84.6
1-2185239-3	C	2057548-3	1X4	41	0°	60.7	56.1
1-2185239-4	C	2170285-1	1X4	59	0°	60.7	56.1

REVISIONS

P	LTR	DESCRIPTION	DATE	DWN	APVD
	C	ECR-20-007825 ADD -13	03JUN2020	DC	JM
	C1	ADDED -14	27JUN2023	DC	CE

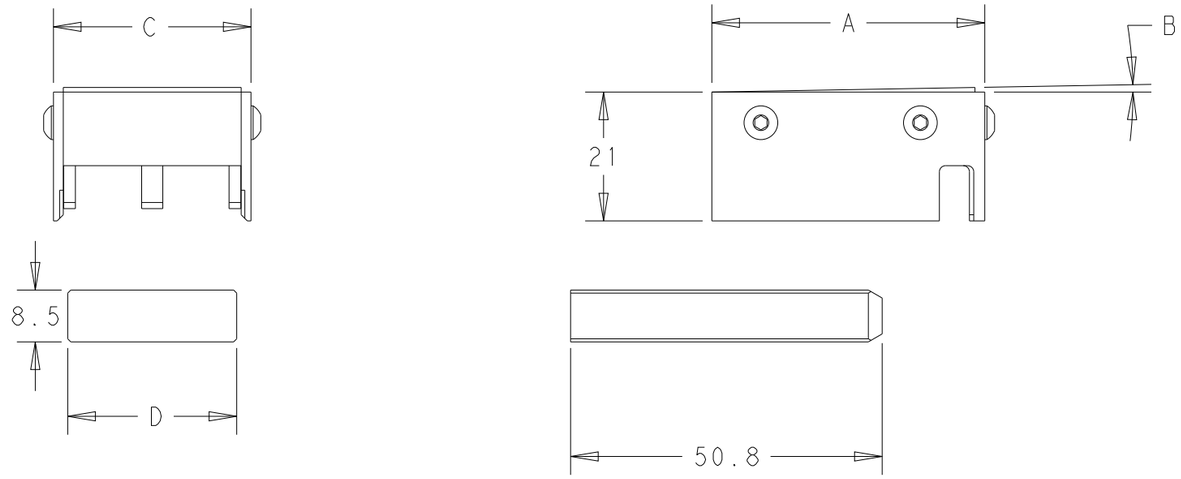

THIS DRAWING IS A CONTROLLED DOCUMENT.

DIMENSIONS: mm

TOLERANCES UNLESS OTHERWISE SPECIFIED:
0 PLC ±-
1 PLC ±-
2 PLC ±-
3 PLC ±-
4 PLC ±-
ANGLES ±-

MATERIAL -
FINISH -

DWN C.ZHU 14DEC2016
CHK E. PRICE 14DEC2016
APVD D.PFAUTZ 14DEC2016
PRODUCT SPEC SEE FIRST USED
APPLICATION SPEC -
WEIGHT -

TE Connectivity

NAME ASSY SEATING TOOL, 1XN SFP+ W/O LP & HS
-

SIZE	CAGE CODE	DRAWING NO	RESTRICTED TO
A3	00779	C-2185239	-

CUSTOMER DRAWING | SCALE 1:1 | SHEET 1 OF 1 | REV C1

1470-19 (3/13)