DATE	REV	ECN	APP'D. BY
1-15-15	A5	10200	TRM
3-11-16	A6	10599	TRM
7-10-23	B0	12208	JE

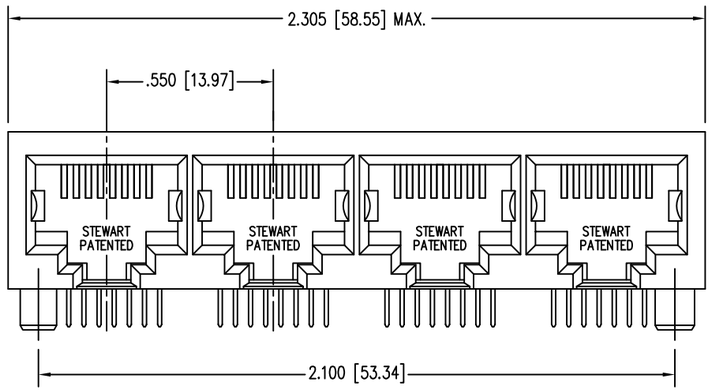

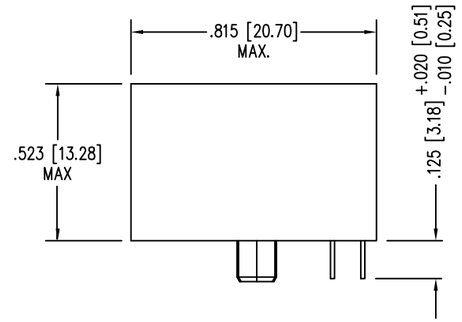

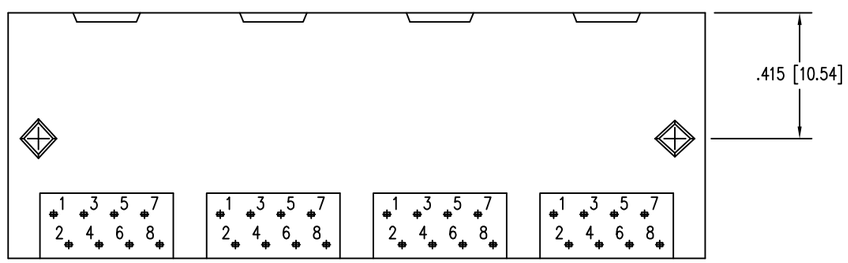

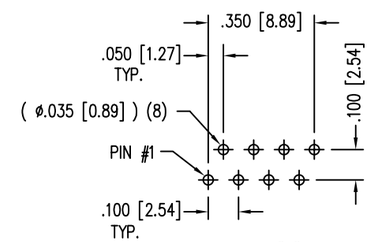

DETAIL "A"
TYPICAL HOLE LAYOUT

NOTES:

1. CONNECTOR MATERIALS:
   HOUSING: THERMOPLASTIC UL94 V-0
   CONTACTS/SHIELD: COPPER ALLOY
   SHIELD PLATING: NICKEL
   CONTACT PLATING: SELECTIVE GOLD IN CONTACT AREA
   SEE CHART FOR PART NUMBER
2. FOR PRODUCT SPECIFICATIONS SEE PR022-01.
3. DIMENSIONS AND TOLERANCES COMPLY WITH TIA-1096 STANDARD.

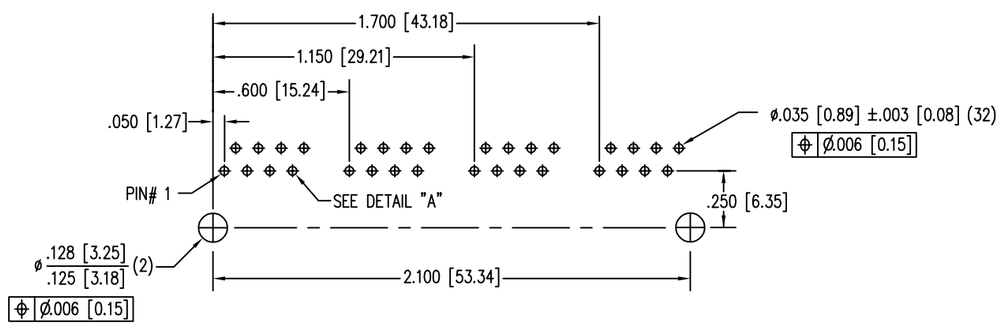

P.C.B. RECOMMENDED HOLE LAYOUT
SEEN FROM COMPONENT SIDE

ALL CENTERLINE DIMENSIONS ARE BASIC.

50 MICRO-INCHES [1.27um]	SS66800-018F
30 MICRO-INCHES [0.76um]	SS66800-017F
CONTACT PLATING IN MATING AREA	PART NUMBER

RoHS

THIRD ANGLE PROJECTION

DO NOT SCALE DRAWING

DRAWING IS SUBJECT TO CHANGE WITHOUT NOTICE

DIMENSIONS: INCHES [METRIC]

UNLESS OTHERWISE SPECIFIED TOLERANCES ARE ±.005 [0.13] ANGLES ARE ± 1°

SHEET NO. 1 OF 1

stewart CONNECTOR a bel group
11118 Susquehanna Trail South
Glen Rock, PA 17327-9199
(717) 235-7512
http://www.stewartconnector.com

TITLE: 4 PORT PCB UNSHIELDED HARMONICA JACK PAC "-NF"

THIS DRAWING AND THE SUBJECT MATTER SHOWN THEREON ARE CONFIDENTIAL AND THE PROPRIETARY PROPERTY OF STEWART CONNECTOR AND SHALL NOT BE REPRODUCED, COPIED, OR USED IN ANY MANNER WITHOUT PRIOR WRITTEN CONSENT OF STEWART CONNECTOR. ONE OR MORE U.S. PATENTS MAY APPLY TO THIS PRODUCT. FOR DETAILS, PLEASE VISIT: HTTP://BELFUSE.COM/STEWART/STEWART_PATENTS/

DRN BY:	EPF	DATE	10-4-05
APPD BY:	TRM	DATE	10-5-05
DWG NO.	CT660012F	REV.	B0

AutoCAD