Jun.1.2024 Copyright 2024 HIROSE ELECTRIC CO., LTD. All Rights Reserved.
In case of consideration for using Automotive equipment / device which demand high reliability, kindly contact our sales window correspondents.

	COUNT	DESCRIPTION OF REVISIONS	BY	CHKD	DATE		COUNT	DESCRIPTION OF REVISIONS	BY	CHKD	DATE
△					. .	△					. .
△					. .	△					. .
△					. .	△					. .

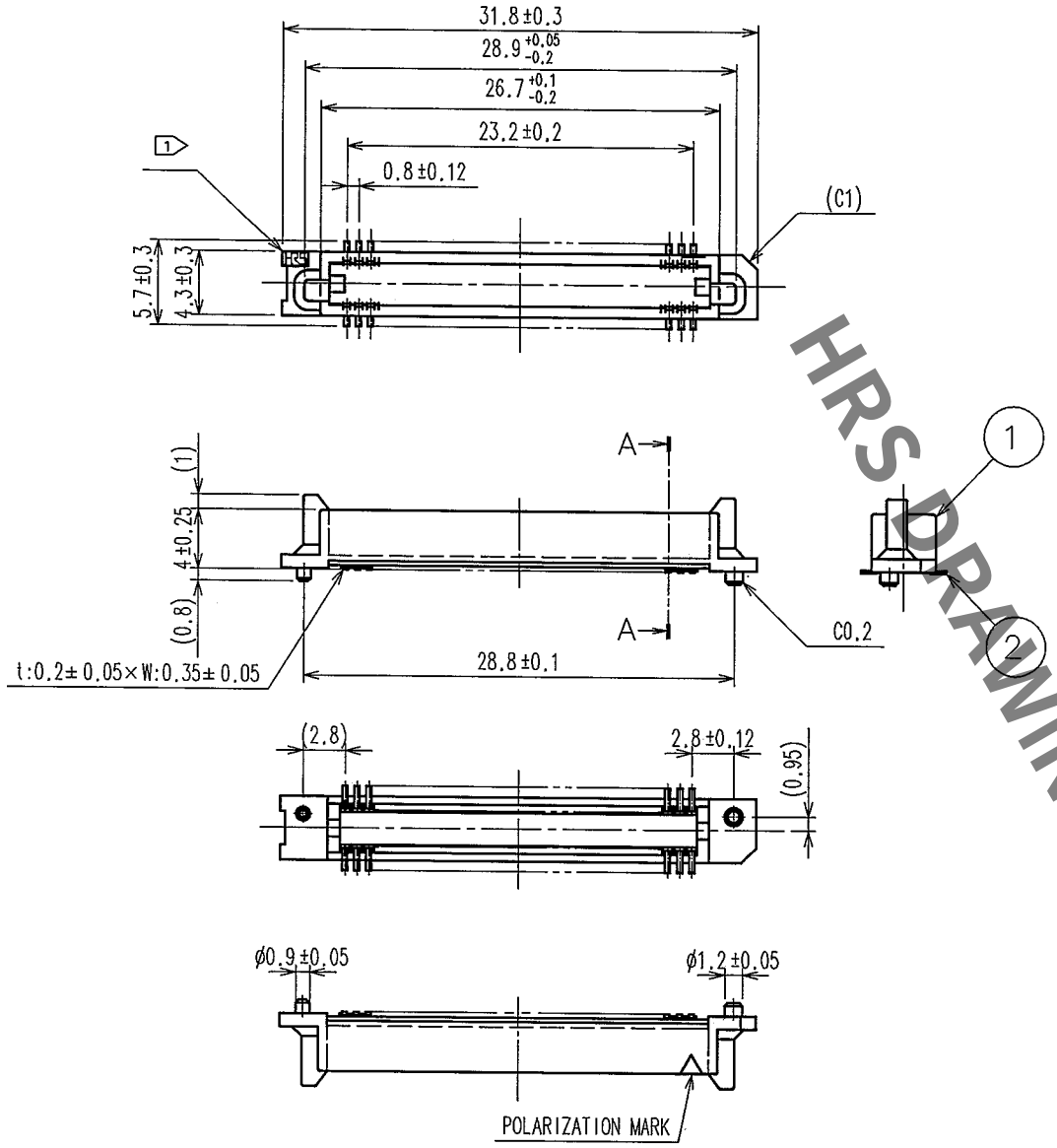

AA(10:1)

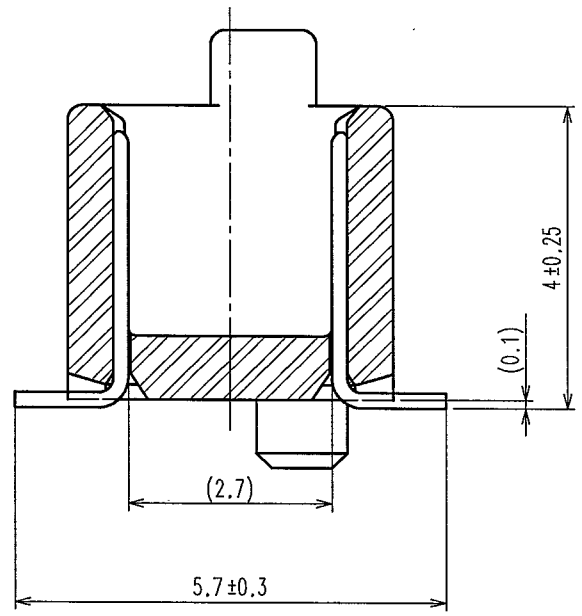

NOTE 1 HRS MARK SHALL BE OPTIONAL.
2 LEAD CO-PLANARITY SHALL BE 0.1mm MAX.
3 THE DIMENSIONS IN PARENTHESES ARE FOR REFERENCE.
4 EMBOSSED CARRIER TAPE PACKAGING SHALL BE APPLIED FOR THIS PRODUCT.
5 FOR MODIFICATION,ETC,PREVENTIVE HOLE FOR SINK MARK MAY BE ADDED ACCORDING TO CIRCUMSTANCES.

RECOMMENDED P.C.B. LAND PATTERN
(MOUNT SIDE)

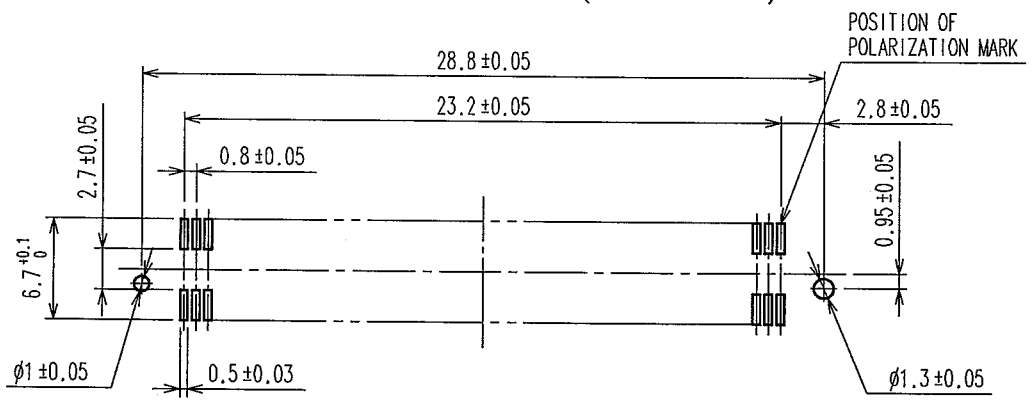

HRS DRAWING FOR REFERENCE

NO.	MATERIAL	FINISH, REMARKS
1	POLYPHENYLENE SULFIDE	LIGHT BROWN UL94V-0
2	PHOSPHOR BRONZE	CONTACT AREA : GOLD 0.1μm min. LEAD AREA : GOLD PLATING FLASH UNDER PLATING : NICKEL 1.5μm min.

CODE NO.(OLD)	DRAWN	DESIGNED	CHECKED	APPROVED	RELEASED
	Y.AOYAGI '05.09.22	J.Nada '05.09.26	K.Ozawa '05.09.27	H.Ekawa '05.09.27	. .

SCALE 2 : 1
UNITS mm

DRAWING NO. EDC3-084968-22
PART NO. FX6-60P-0.8SV(92)
HRS HIROSE ELECTRIC CO., LTD
CODE NO. CL576-0005-4-92
1/2

TO

Jun.1.2024 Copyright 2024 HIROSE ELECTRIC CO., LTD. All Rights Reserved.
In case of consideration for using Automotive equipment / device which demand high reliability, kindly contact our sales window correspondents.

	COUNT	DESCRIPTION OF REVISIONS	BY	CHKD	DATE		COUNT	DESCRIPTION OF REVISIONS	BY	CHKD	DATE
△					. .	△					. .
△					. .	△					. .
△					. .	△					. .

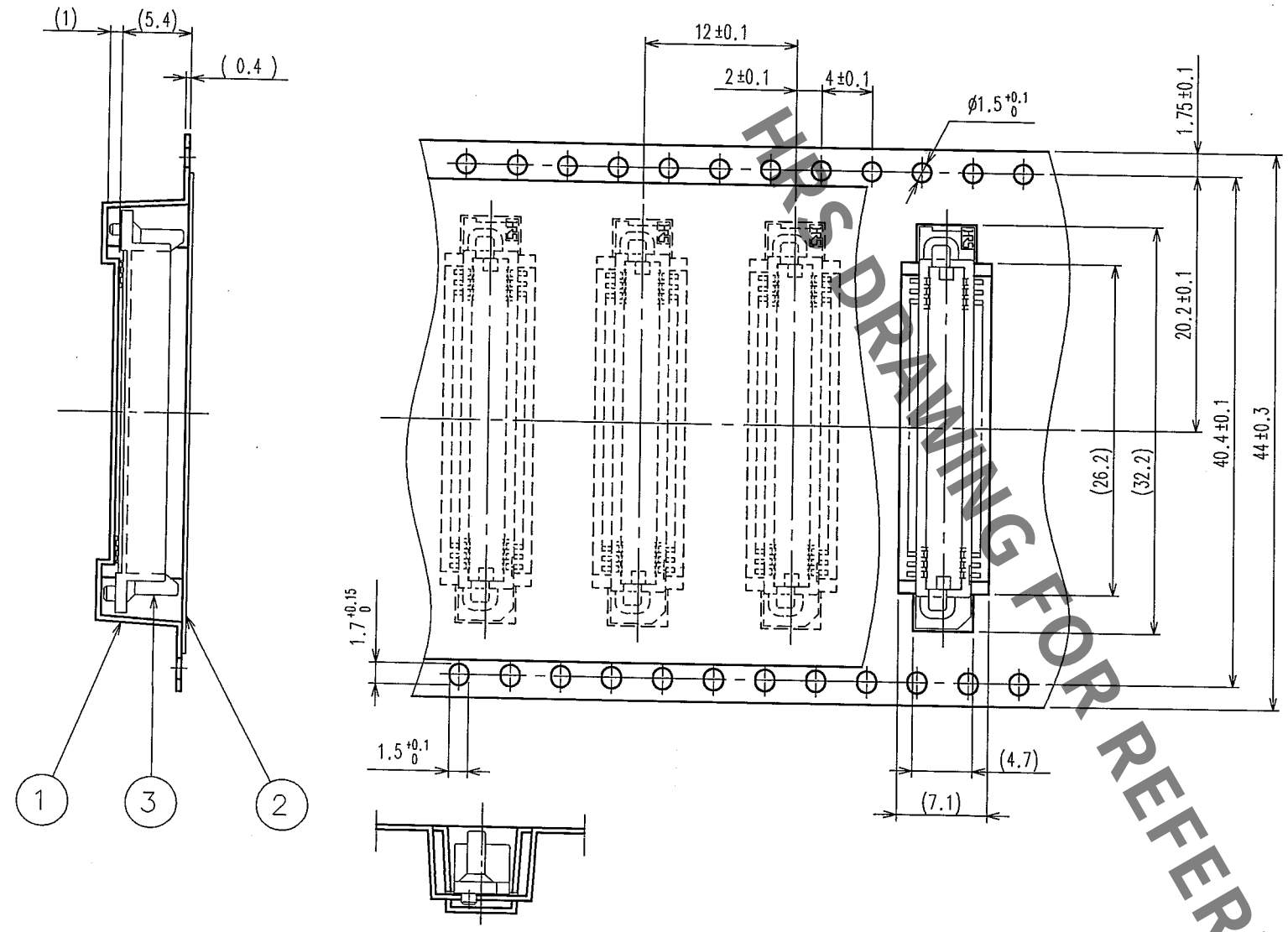

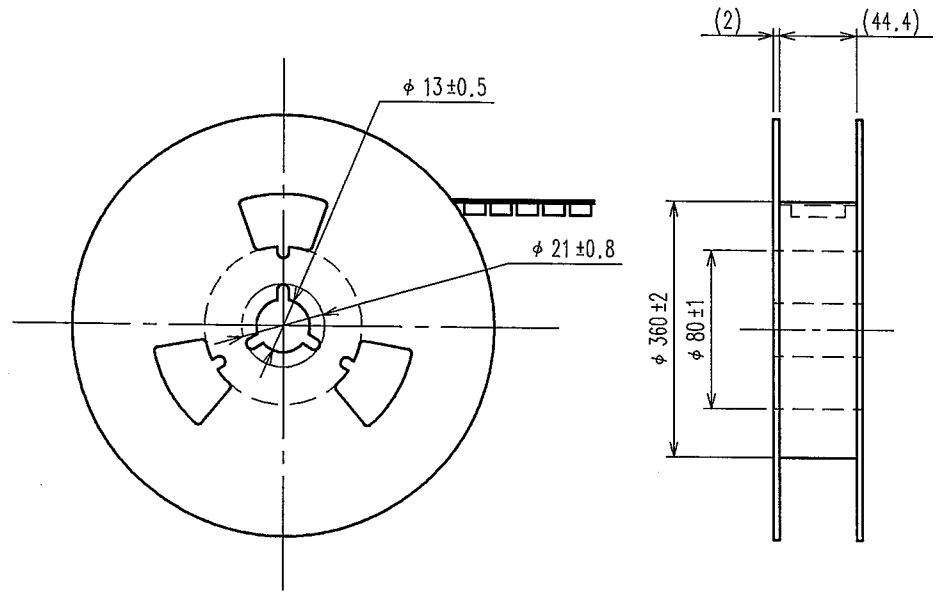

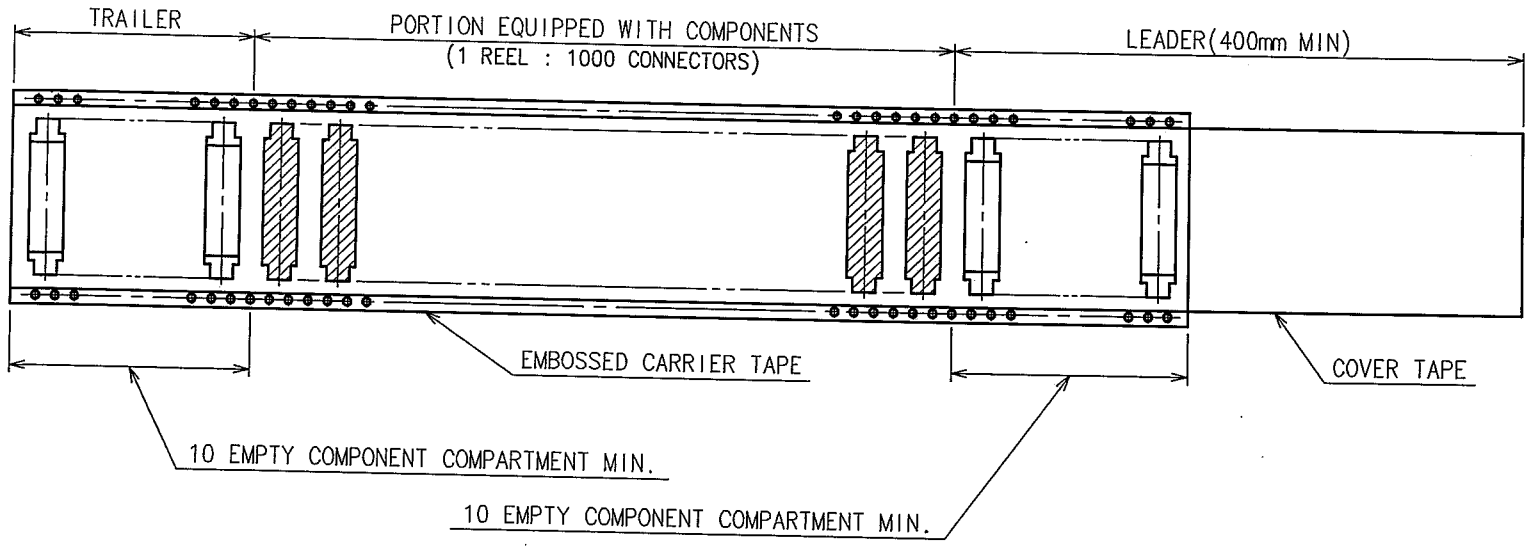

HRS DRAWING FOR REFERENCE

NOTE 1 THE DIMENSIONS IN PARENTHESES ARE FOR REFERENCE.
2 1 REEL : 1000 CONNECTORS

NO.	MATERIAL	FINISH, REMARKS	NO.	MATERIAL	FINISH, REMARKS
2	POLYESTER	COVER TAPE			
1	POLYSTYRENE	EMBOSSED CARRIER TAPE	3		(CONNECTOR)

CODE NO.(OLD)	DRAWN	DESIGNED	CHECKED	APPROVED	RELEASED
	Y.AOYAGI '05.09.22	J. Noda '05.09.26	K. Ozawa '05.09.27	H. Okawa '05.09.27	. .

SCALE 2 : 1	DRAWING NO. EDC3-084968-22	PART NO. FX6-60P-0.8SV(92)
UNITS mm	HRS HIROSE ELECTRIC CO., LTD	CODE NO. CL576-0005-4-92

2/

TO