Description	Material	Finish
Body	Brass	Nickel
Pin	Brass	Gold
Insulation	PTFE	N/A
Gasket	SI Rubber	Rubber
Crimp Ring	Brass	Nickel
Heat Shrink	Polyolefin	Black

REVISIONS			
REV	DESCRIPTION	DATE	APPV
B	Updated footprint and dimensions; Added new title block	2-JUL-12	SAH

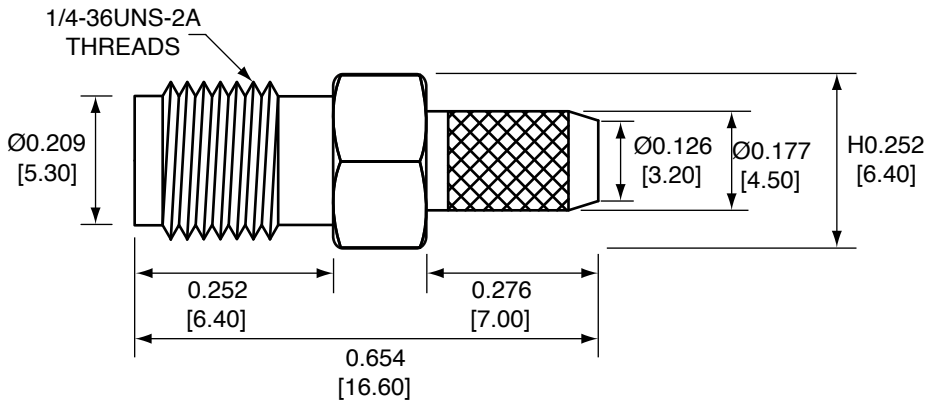

SIDE VIEW

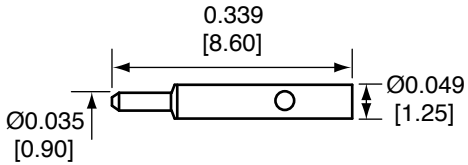

PIN

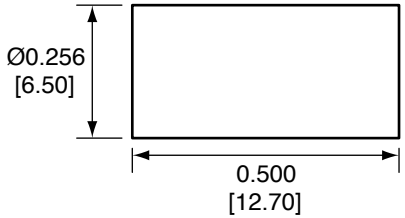

CRIMP RING

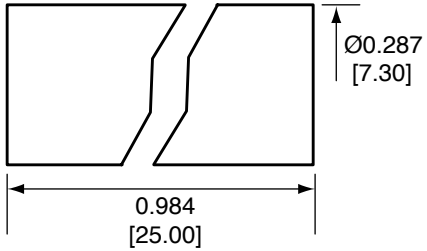

HEAT SHRINK

CONREVSMA011-R58 ASSEMBLY INSTRUCTIONS

1. Strip cable to recommended dimensions.
2. Slip heat shrink and crimp ring onto stripped cable.
3. Solder the pin to the center conductor.
4. Insert the pin, center conductor, and insulator into the body.
5. Wrap the braid around the tail of the body and crimp the ring with a 0.213" hex crimp tool (or one labeled for use with RG-58 cable).
6. Use heat shrink to cover crimp.

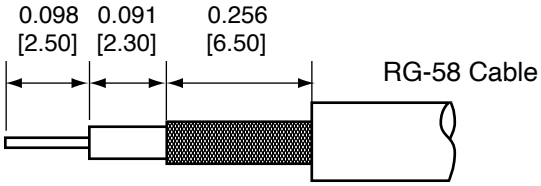

RECOMMENDED CABLE STRIPPING DIMENSIONS

NOTES: (UNLESS OTHERWISE SPECIFIED)

1. ALL DIMENSIONS ARE IN INCHES [mm].
2. DIMENSIONS APPLY AFTER FINISHING.
3. MANUFACTURE TO BE COMPLIANT WITH EU RoHS DIRECTIVE.
4. SAFETY BREAK ALL SHARP CORNERS AND EDGES .02 MAXIMUM.

WARNING: THIS DRAWING CONTAINS PROPRIETARY INFORMATION THAT IS THE SOLE PROPERTY OF LINX TECHNOLOGIES, AND SHALL BE TREATED AS SUCH. NO DISCLOSURE OR REPRODUCTION OF THIS DOCUMENT IS PERMITTED, IN WHOLE OR IN PART, WITHOUT THE EXPRESS WRITTEN PERMISSION OF LINX TECHNOLOGIES OR ITS DESIGNATED AGENTS.

MATERIAL:

FINISH:

TOLERANCES:
.020 [0.50]-.200 [5.00]= ±.008 [0.20]
.200 [5.00]-1.200 [30.00]= ±.016 [0.40]
1.20 [30.0]-4.75 [120.0]= ±.024 [0.60]
4.75 [120.0]-12.40 [315.0]= ±.040 [1.0]

PROJECTION:

ANGLES: ±1°

DRAWN: B.MURPHY DT: 2-JUL-12

ENGR: S.HOGAN DT: 2-JUL-12

TITLE:

RP-SMA FEMALE CABLE END
CRIMP FOR RG-58 CABLE

SIZE A

DWG. NO. CONREVSMA011-R58

REV B

SCALE: 2:1

DO NOT SCALE DRAWING

SHEET 1 OF 1

©2023 TE Connectivity. All Rights Reserved.

LDCFDLT_A