Jul.1.2024 Copyright 2024 HIROSE ELECTRIC CO., LTD. All Rights Reserved.
In case of consideration for using Automotive equipment / device which demand high reliability, kindly contact our sales window correspondents.

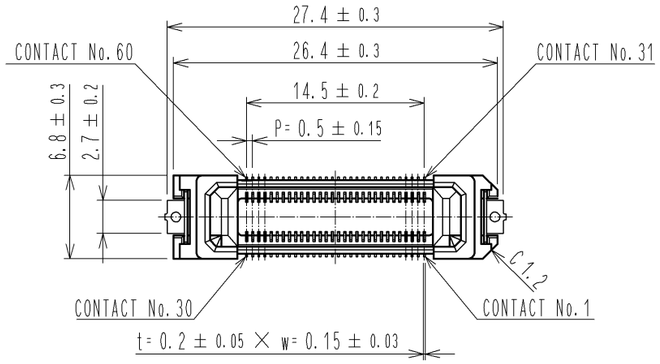

RECOMMENDED LAND PATTERN DIMENSION OF PCB

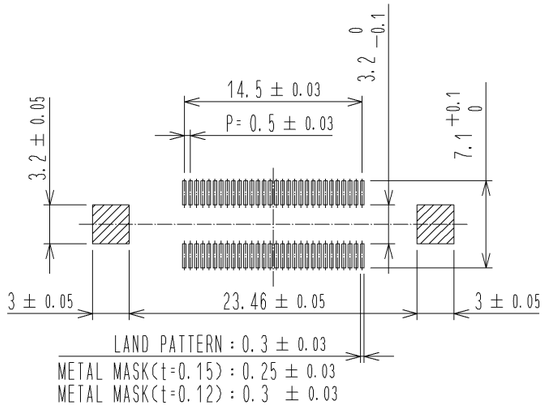

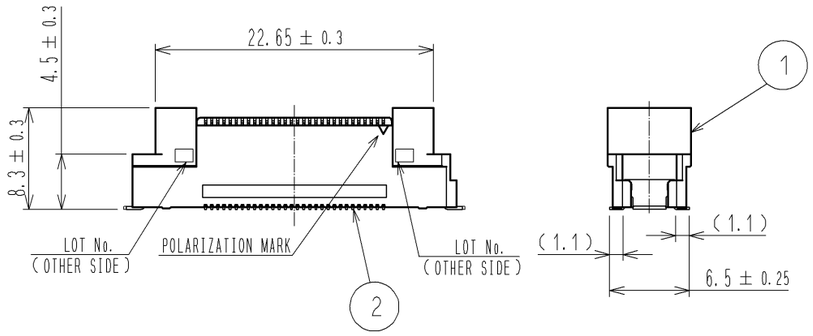

CROSS SECTION OF MATING(FREE)

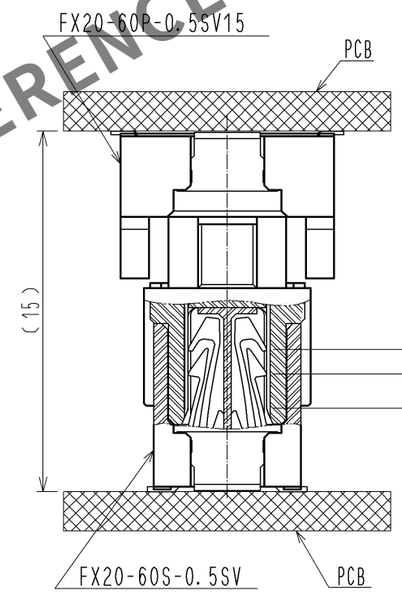

CROSS SECTION OF MATING(FREE)

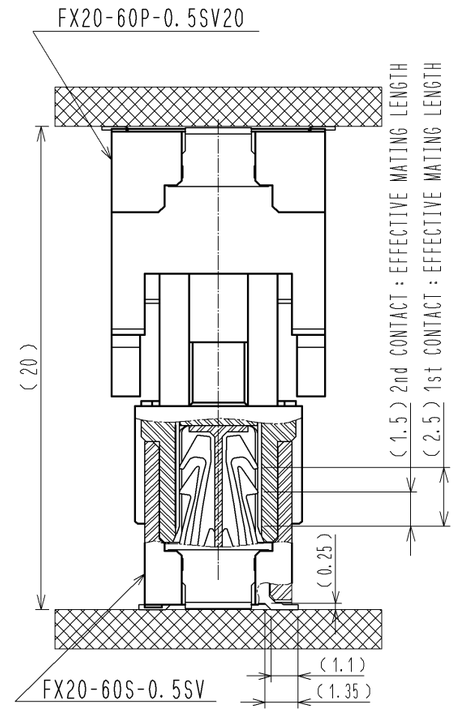

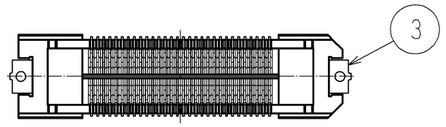

2 DRAWING FOR PACKING(FREE)

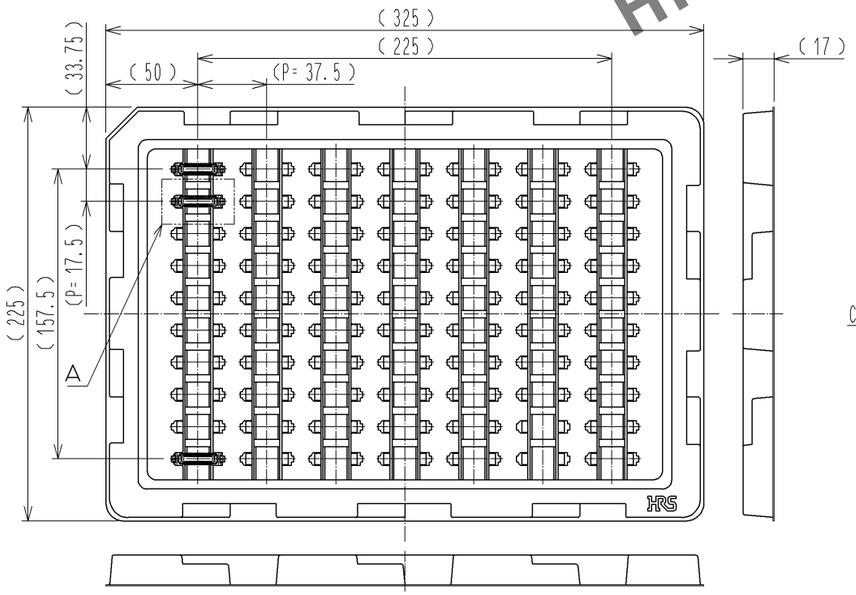

A(1:1)

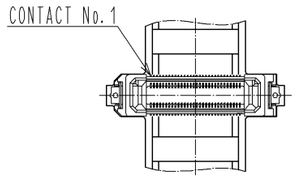

NOTE
1 LEAD CO—PLANARITY IS 0.1mm MAX.
2 THIS IS PACKAGED IN TRAY. (70pcs/TRAY)
3 BLEMISH AND HIT MARK CAN BE OCCURED THROUGH OUT THE MANUFACTURING PROCESS WHICH DOESN' T AFFECT QUALITY LEVEL.
4 PLEASE NOTE THAT EXCESSIVE WRENCHING FORCE COULD DAMAGE THIS CONNECTOR.
PLEASE REFER TO THE GUIDELINE FOR DETAILED REGULATIONS OF THE MATING METHOD.
5 THE DIMENSIONS IN PARENTHESES ARE FOR REFERENCES.

NO.	MATERIAL	FINISH , REMARKS
1	LCP	BLACK UL94V-0

NO.	MATERIAL	FINISH , REMARKS
3	BRASS	TIN-PLATING 1μm
2	PHOSPHOR BRONZE	CONTACT AREA:GOLD 0.1μm
		LEAD AREA:GOLD 0.03μm
		UNDER PLATING:NICKEL 1μm

UNITS	SCALE	COUNT	DESCRIPTION OF REVISIONS	DESIGNED	CHECKED	DATE
mm	2:1					

HRS HIROSE ELECTRIC CO., LTD.

APPROVED	HS. OKAWA	12.03.06	DRAWING NO.	EDC3-336339-00
CHECKED	KI. HIROKAWA	12.03.06	PART NO.	FX20-60S-0.5SV
DESIGNED	KT. DOI	12.03.02		
DRAWN	KT. DOI	12.03.02	CODE NO.	CL570-1102-8-00

1/1

HRS DRAWING FOR REFERENCE