PANDUIT PART NUMBER	QUANTITY
RGTSM6-C	100

NOTES:
1. PAINT PIERCING THREAD DESIGN TO PROVIDE GROUNDING CONNECTION TO THE RACK.
2. M6 SLOTTED HEX HEAD THREAD FORMING SCREW.
3. MATERIAL: ZINC PLATED LOW CARBON STEEL
4. PANDUIT PART NUMBER: RGTSM6-C
5. DIMENSIONS ARE IN MILLIMETERS.

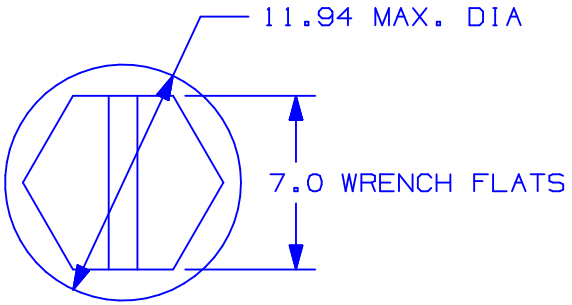

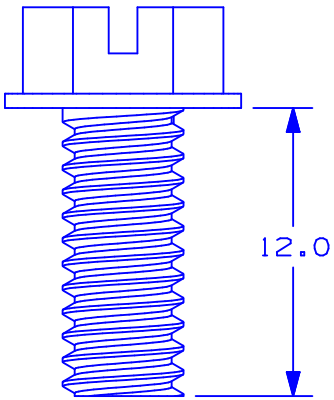

C41471_00

REV	DATE	BY	CHK	DESCRIPTION	ECN #	PM	CUST
00	12/04	JHNU		DRAWING RELEASED			

PANDUIT CORP. TINLEY PARK, ILLINOIS

M6 SLOTTED HEX HEAD
THREAD FORMING SCREW (RGTSM6)
CUSTOMER DRAWING

DRAWN BY	CHK'D	SCALE	DRAWING NO.
JHNU		NONE	C41471