REVISIONS					
REV.	ECN NO.	LOCATION	DESCRIPTION	DATE	DESIGN
A0	N/A		INITIAL RELEASE	/	/
A1	N/A		图面升级整理图面	2025.03.03	阿树

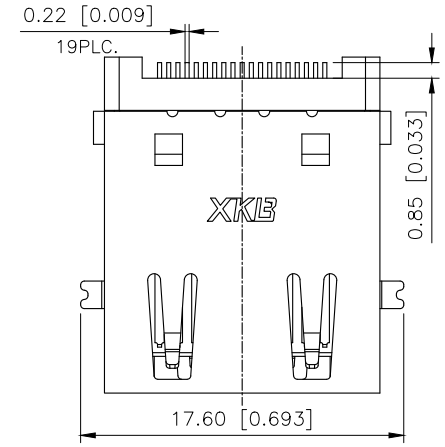

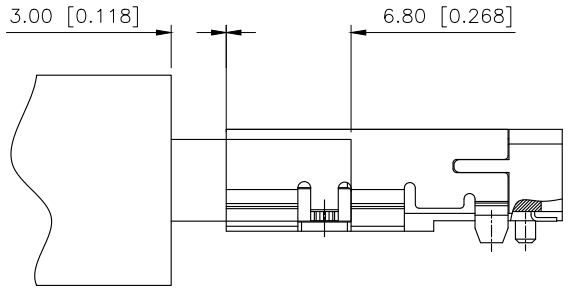

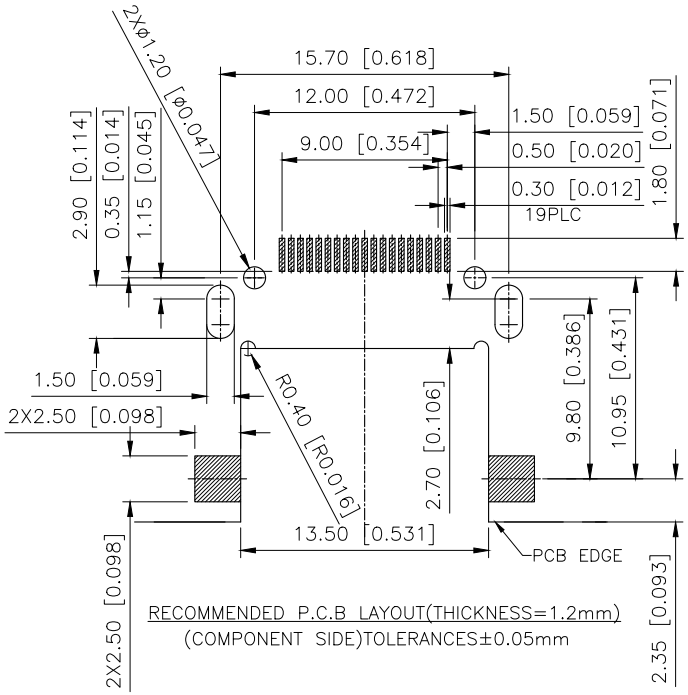

RECOMMENDED P.C.B LAYOUT(THICKNESS=1.2mm)
(COMPONENT SIDE)TOLERANCES±0.05mm

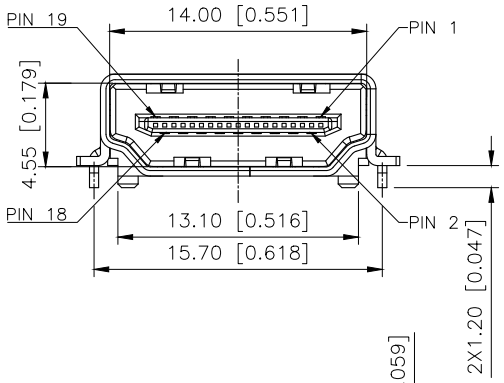

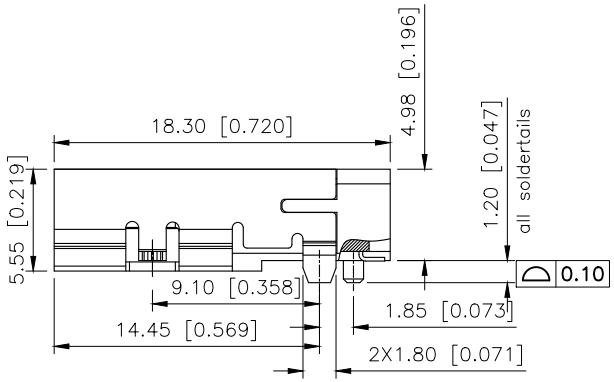

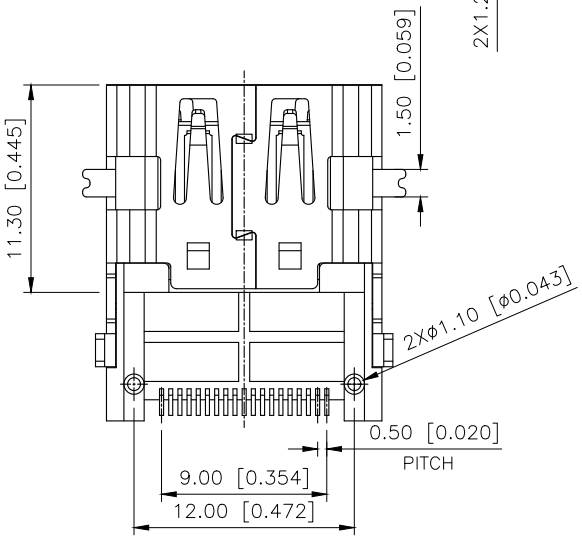

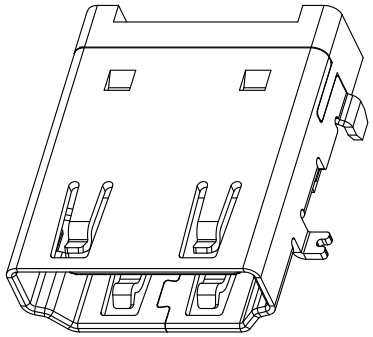

NOTE:
1.MATERIAL:
HOUSING: THERMOPLASTIC HIGH TEMP WITH 40%GF,UL94V-0.
CONTACT: BRASS T=0.20mm
SHELL: BRASS T=0.50mm
2.FINISH:
CONTACT: GOLD PLATING ON CONTACT AREA,
MATTE MATTE TIN PLATING ON SOLDERTAILS
100u" MIN. NICKEL UNDERPLATING OVERALL.
SHELL:50~90u"MIN. NICKEL PLATING OVERALL.

A71-05H7-1X1N1

1:Au 1U"
5:Au 15U"
6:Au 30U"

AuGLAR	±5°
X.	±0.40
X.x	±0.30
X.xx	±0.20
X.xxx	±0.15
UNSPECIFIED TOLERAuCES	

XKB Connection

XKB INDUSTRIAL PRECISION CO.,LIMITED

DESIGN	阿树	VIEW:	MODEL TYPE: HDMI CONNECTOR
CHECKED		UNIT: mm/in	PART NO.: A71-05H7-1X1N1
APPROVED		SIZE: A4	DWG NO.:

SCALE	PAGE	REVISION
N/A	1/1	A1