| REVISIONS | | | | | |
|---|---|---|---|---|---|
| REV | ECO | DESCRIPTION | DATE | BY | APPR |
| B1 | - | RELEASED DRAWING | NOV-23-2014 | BEN | TOMMY |
| B2 | - | UPDATE RATED VOLTAGE | OCT-28-2022 | JUN | TOMMY |

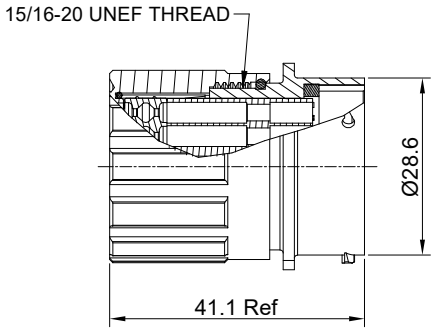


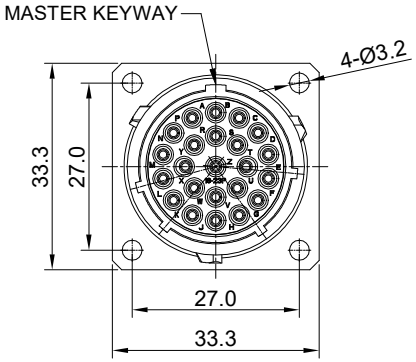


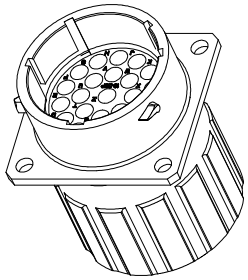

NOTES: (UNLESS OTHERWISE SPECIFIED)

1. MATERIAL:
   SHELL: ZINC ALLOY, NICKEL PLATED.
   INSERT: THERMOPLASTIC, UL94 V-0.
   END CAP: THERMOPLASTIC, UL94 V-0.
   PLASTIC BUSHING: THERMOPLASTIC, UL94 V-0.
   SEAL GASKET: NBR/SILICONE RUBBER.
   O-RING: NBR/SILICONE RUBBER.
   WIRE SEAL: SILICONE RUBBER.
2. SPECIFICATIONS:
   2.1 RATED CURRENT: 13A (MAX).
   B2 2.2 RATED VOLTAGE: 500V (AC/DC).
   2.3 OPERATING TEMPERATURE: SEE CHART.
   2.4 DIELECTRIC WITHSTANDING VOLTAGE: LESS THAN 2 MILLIAMPS CURRENT LEAKAGE@2000 VOLTS AC.
   2.5 INSULATION RESISTANCE: 5000 MEGOHMS MIN.
   2.6 IP--CLASS: IP67.
   2.7 MATING CYCLES DURABILITY: 500 CYCLES MIN.
   2.8 ROHS COMPLIANT.
3. SUITABLE CONTACTS : 16# CONTACTS.
4. ALL DIMENSIONS ARE FOR REFERENCE USE ONLY.
5. CONTACT SIZE AND REAR SEAL WIRE RANGE:

| CONTACT SIZE | MIN. INSUL O.D. | MAX. INSUL O.D. | WIRE RANGE |
|---|---|---|---|
| 16# | Ø2.0mm | Ø3.2mm | 14 - 24AWG |

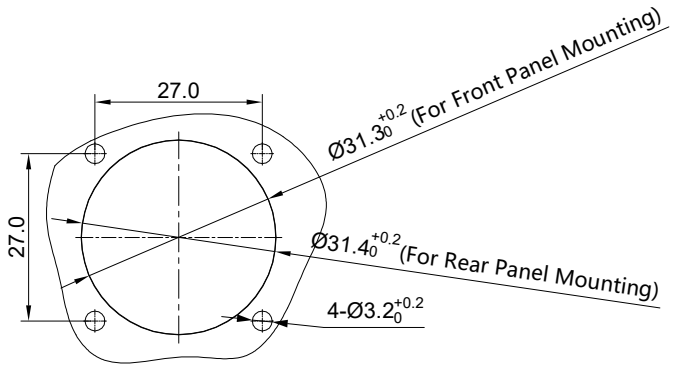


PANEL CUT OUT REFERENCE

| KEY POS | PART NUMBER | |
|---|---|---|
| | -40°C ~ 105°C | -40°C ~ 125°C |
| N | RT001823PNHEC | RT001823PNHEC03 |
| W | RT001823PWHEC | RT001823PWHEC03 |
| X | RT001823PXHEC | RT001823PXHEC03 |
| Y | RT001823PYHEC | RT001823PYHEC03 |
| Z | RT001823PZHEC | RT001823PZHEC03 |

| | SEE PART NUMBER CHART | | |
|---|---|---|---|
| QUANTITY | PART NUMBER | DESCRIPTION | ITEM |

MATERIALS LIST

UNLESS OTHERWISE SPECIFIED
1) All dimensions are in metric(mm).
2) Tolerances are as follows:
1 PL DEC ±0.30
2 PL DEC ±0.15
3 PL DEC ±0.08
Fractions ±1/64
Angles ±1°
3) Note reference = X

MATERIAL SPECIFICATIONS:

PROCESS SPECIFICATIONS:

NEXT ASS'Y:

| SIGNATURES | | DATE |
|---|---|---|
| DRAWN: | JUN | OCT-28-2022 |
| CHECKED: | ORION | NOV-3-2022 |
| ENGINEER: | | |
| APPROVAL: | TOMMY | NOV-7-2022 |
| CUSTOMER: | | |

THIS DRAWING IS SUPPLIED FOR INFORMATION ONLY. DESIGN FEATURES, SPECIFICATIONS AND PERFORMANCE DATA SHOWN HEREON ARE THE PROPERTY OF THE AMPHENOL CORPORATION. NO RIGHTS OF REPRODUCTION ARE IMPLIED. ALL DIMENSIONS ARE SUBJECT TO NORMAL MANUFACTURING VARIATIONS.

Amphenol

Sine Systems - www.amphenol-sine.com
44724 Morley Drive
Clinton Township, MI 48036

EcoMate Aquarius,RECEPTACLE,
SIZE 18,23POS,PIN,END CAP.

| SIZE | TYPE | DWG NO: | REVISION |
|---|---|---|---|
| B | C- | RT001823P*HEC* | B2 |

SCALE: NONE SHEET 1 OF 1

TITLE: EcoMate Aquarius,RECEPTACLE,SIZE 18,23POS,PIN,END CAP.
DWG NO: RT001823P*HEC*
REV: B2
SH: 1
OF: 1