REVISIONS					
REV.	ECN NO.	LOCATION	DESCRIPTION	DATE	DESIGN
A0	N/A		INITIAL RELEASE	/	/
A1	N/A		图面升级整理图面	2025.07.01	阿树

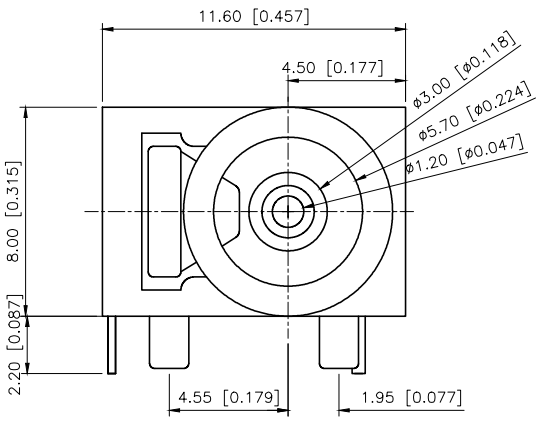

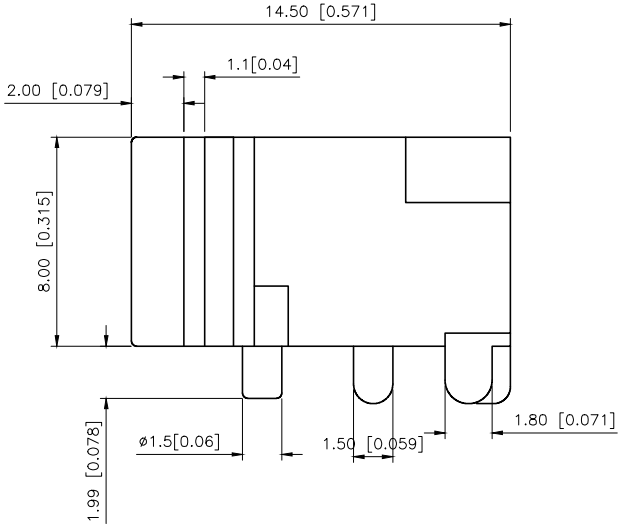

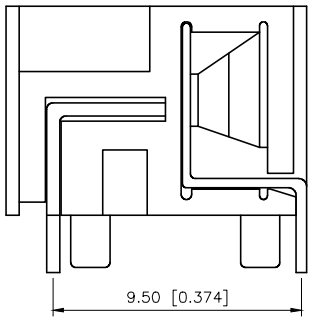

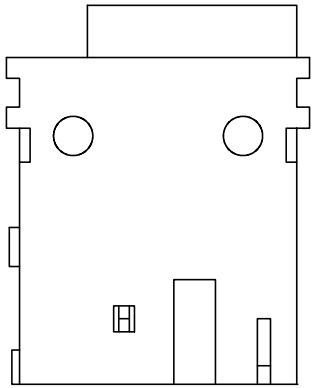

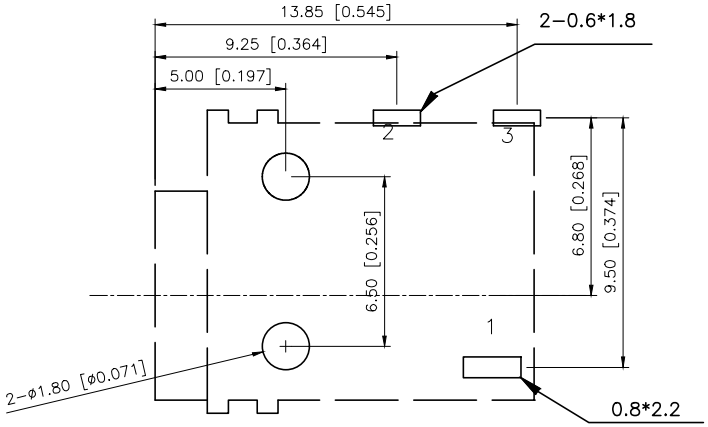

PCB LAYOUT

NOTES:
1.ELECTRIC CHARACTERISTICS:
1-1.CONTACT CURRENT RATING: 4A.
1-2.CONTACT VOLTACE RATING:20V DC
1-3.CONTACT RESISTANCE:30mΩ MAX.
1-4.DIFLFCTRIC WITHSTANDING VOLTAGE：500V AC
1-5.INSULATION RESISTANCE:100MΩ MIN.AT DC 500V
2.MECHANICALCHARACTERISTICS
2-1.DURABILITY:3000 CYCLES
2-2.INSERTION AND EXTRACTION FORCE:
2-2.1.INSERTION FORCE: 30N MAX.
2-2.2.EXTRACTION FORCE: 3N MIN
3.FNVIRENMENT CHARACTERISTICS:
3-1.OPERATINGTEMPERATURE-25℃~+85℃
3-2.HUMIDTY:45~85% RH.

SCHEMATIC	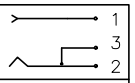
Model	DC-037G

Terminal 3	Brass	Tin
Terminal 2	Phosphor Bronze	Tin
Terminal 1	Brass	Tin
Plastic	PBT	
PAPT NAMF	MATERIAL	PLATING

AuGLAR	±5°
X.	±0.40
X.x	±0.30
X.xx	±0.20
X.xxx	±0.15
UNSPECIFIED TOLERAuCES	

TOP VIEW

DESIGN	阿树	VIEW:	MODEL TYPE: DC POWER JACK
CHECKED		UNIT: mm/in	PART NO.: DC-037G
APPROVED		SIZE: A4	DWG NO.:

XKB INDUSTRIAL PRECISION CO.,LIMITED

SCALE	PAGE	REVISION
N/A	1/1	A1