MATERIAL NUMBER	ENGINEERING NUMBER	NUMBER OF CIRCUITS "XX"	DIM. "A"		DIM. "B"		HINGED COVER COLOR	HINGED COVER MATERIAL
			IN	mm	IN	mm		
387291658	72803-C-H	03	1.21	30.7	.750	19.05	BLACK	PBT (UL94V-O)
387291452	72804-C-H	04	1.58	40.1	1.125	28.58	BLACK	PBT (UL94V-O)

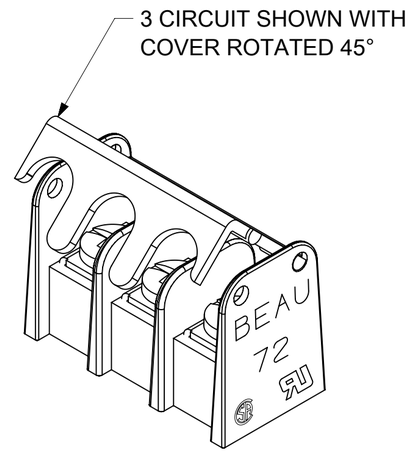

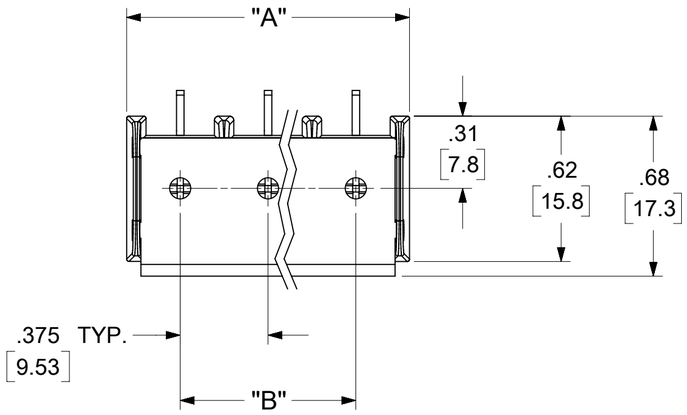

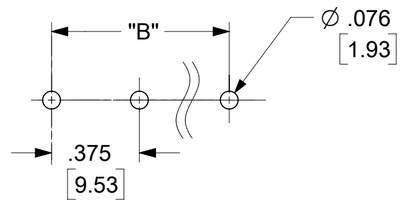

PTH PATTERN

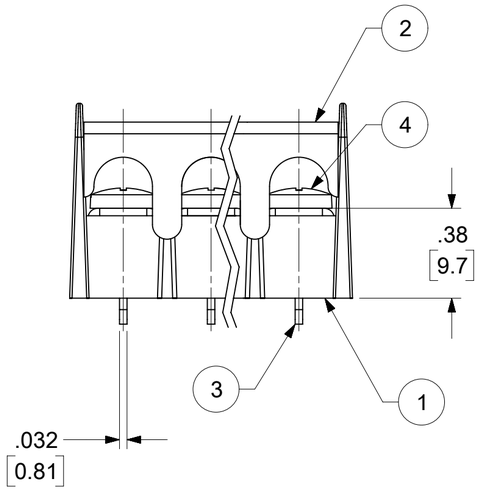

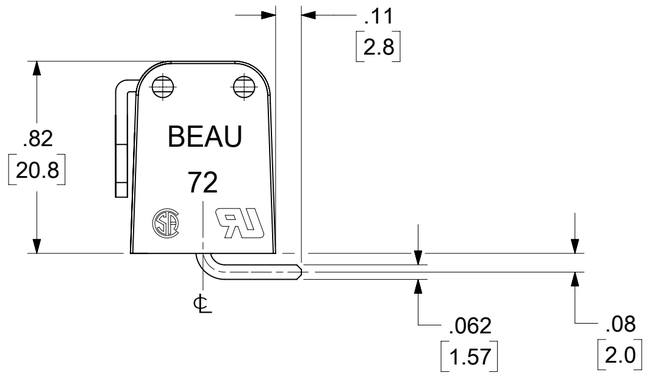

NOTES:

1. MATERIAL: SEE TABLE
2. FINISH: SEE TABLE
3. ELECTRICAL SPECS:
   MAX VOLTAGE: 300V
   MAX CURRENT: 15A
4. WIRE RANGE: 22 TO 14 AWG
5. SCREW TIGHTENING TORQUE: 12 IN LBS. (MAX)
6. WIRE STRIP LENGTH: .31 (7.9mm)
7. OPERATING TEMP: -40°C TO +100°C
8. PRODUCT SPEC: PS-38710-001
9. PART IS ROHS COMPLIANT
10. XX EQUALS NUMBER OF CIRCUITS

ITEM	QTY.	DESCRIPTION	MATERIAL	FINISH
4	XX	SCREW, #6-32X.250, BHD, PH/SL (STD.)	STEEL	ZINC, CLEAR CHROMATE
3	XX	TERM WIRE WRAP 6C SN-KT	BRASS	TIN PLATE (MATTE) .00015/.00025 TIN OVER .00005/.00015 NICKEL
2	1	COVER, HINGE (UL 94V-0)	SEE CHART	SEE CHART
1	1	INSULATOR, SR, PC, CH	POLYESTER (PBT)	BLACK

DOCUMENT STATUS	P1	RELEASE DATE	2024/03/15 07:48:19

THIS DRAWING CONTAINS INFORMATION THAT IS PROPRIETARY TO MOLEX ELECTRONIC TECHNOLOGIES, LLC AND SHOULD NOT BE USED WITHOUT WRITTEN PERMISSION

DIMENSION UNITS: INCH/mm
SCALE: 2:1

GENERAL TOLERANCES (UNLESS SPECIFIED)

	MM	INCH
4 PLACES	±	±
3 PLACES	±	± 0.005
2 PLACES	± 0.13	± 0.01
1 PLACE	± 0.3	±
0 PLACES	±	±
ANGULAR TOL	± 2.0 °	

DRAFT WHERE APPLICABLE MUST REMAIN WITHIN DIMENSIONS

CURRENT REV DESC: REMOVED OBSOLETED PART NUMBER AS PER PCN#513386.

EC NO: 777443
DRWN: RAVINR1 2023/08/02
CHK'D: GGA 2024/03/15
APPR: GGA 2024/03/15

INITIAL REVISION:
DRWN: RSTONE 2015/01/21
APPR: JFMURPHY 2015/02/25

THIRD ANGLE PROJECTION | DRAWING: C-SIZE | SERIES: 38729

molex

SR BTS .375 PITCH PC, RA
WITH CLEAR HINGED COVER

PRODUCT CUSTOMER DRAWING

DOCUMENT NUMBER	DOC TYPE	DOC PART	REVISION
SD-38729-077	PSD	001	B2

MATERIAL NUMBER	CUSTOMER	SHEET NUMBER
SEE CHART	GENERAL MARKET	1 OF 1