THIS DRAWING IS UNPUBLISHED. RELEASED FOR PUBLICATION -,- .
© COPYRIGHT - TE Connectivity Ltd. ALL RIGHTS RESERVED.

REVISIONS

P	LTR	DESCRIPTION	DATE	DWN	APVD
	D	LC20-0016-11 / ECO-11-001735	20JAN2011	DM	BJ
	D1	LC20-0062-18 / ECO-18-008292	28MAY2018	DM	BJ

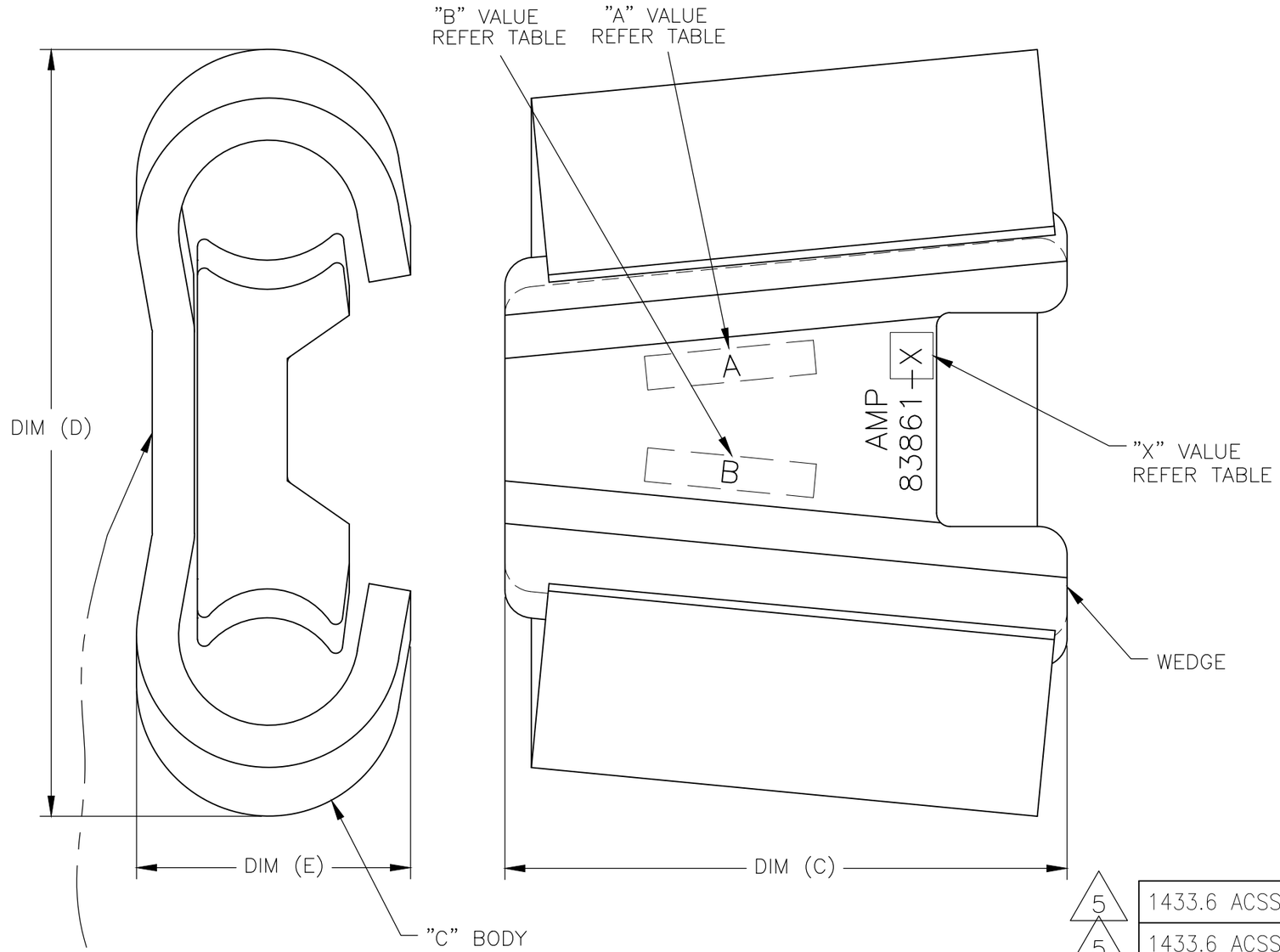

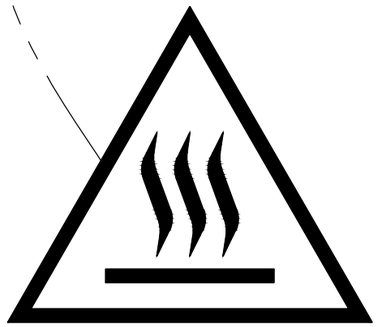

HOT SURFACES SYMBOL 5

1. WEDGE AND C BODY ARE MADE OF ALUMINUM ALLOY.
2. WIRE SIZES ARE MARKED ON WEDGE.
3. INHIBITOR IS APPLIED AT FACTORY, TO GROOVES OF WEDGE AND C BODY.
4. DIMENSIONS ARE FOR REFERENCE ONLY.
5. 83861-2, 83861-3 & 83861-4 ARE FOR HIGH TEMPERATURE APPLICATION. "HOT SURFACES" SYMBOL AS PER IEC 417 IS INK STAMPED ON CONNECTOR BODY.
6. USE YELLOW CARTRIDGE NO. 69338-4.

DIM (E)	DIM (D)	DIM (C)	PART NO.
(2)	(5.7	(3.8)	83861-4
(2)	(5.7)	(3.8)	83861-3
(2)	(5.7)	(3.9)	83861-2
(2.5)	(6.8)	(5)	83861-1

"A"	"B"	"X"	PART NO.
5 1433.6 ACSS/TW (39/19)	795 LUG	-4	83861-4
5 1433.6 ACSS/TW (39/19)	795 AAC	-3	83861-3
5 1433.6 ACSS/TW (39/19)	1433.6 ACSS/TW (39/19)	-2	83861-2
1431 AAC	1272 ACSR (45/7)	-1	83861-1

THIS DRAWING IS A CONTROLLED DOCUMENT.

DIMENSIONS: INCHES

TOLERANCES UNLESS OTHERWISE SPECIFIED:
0 PLC ± -
1 PLC ± -
2 PLC ± -
3 PLC ± -
4 PLC ± -
ANGLES ± -

MATERIAL: SEE NOTE 1
FINISH: NONE

DWN D. MURUGIAH 31MAY2006
CHK A. BULZA 31MAY2006
APVD B. JOHNSON 31MAY2006
PRODUCT SPEC —
APPLICATION SPEC —
WEIGHT —

TE Connectivity Ltd.

NAME: WEDGE TAP CONNECTOR, 1431 SERIES, AMPACT
—

SIZE A3 | CAGE CODE 00779 | DRAWING NO C-83861 | RESTRICTED TO —

CUSTOMER DRAWING | SCALE NTS | SHEET 1 OF 1 | REV D1