SPC TECHNOLOGY

ALL RIGHTS RESERVED. NO PORTION OF THIS PUBLICATION, WHETHER IN WHOLE OR IN PART CAN BE REPRODUCED WITHOUT THE EXPRESS WRITTEN CONSENT OF SPC TECHNOLOGY.

SPC-F005.DWG

REVISIONS

DOC. NO. SPC-F005 * Effective: 7/8/02 * DCP No: 1398

DCP #	REV	DESCRIPTION	DRAWN	DATE	CHECKD	DATE	APPRVD	DATE
1876	A	RELEASED	EO	07/25/06	SA	07/25/06	HO	07/25/06

RoHS Compliant

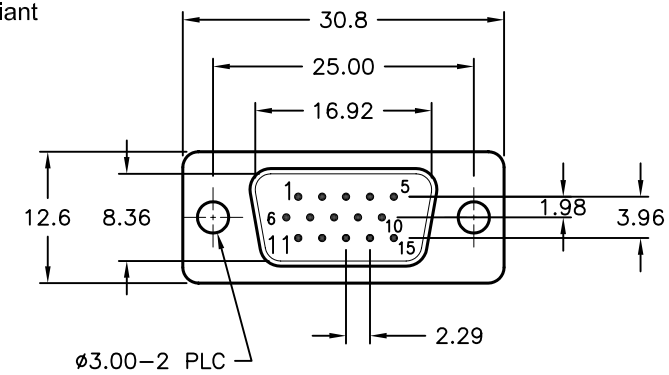

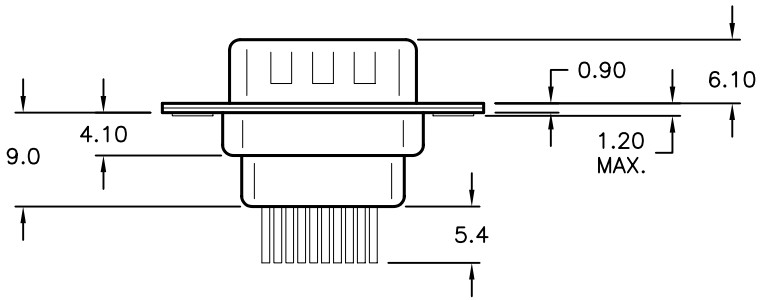

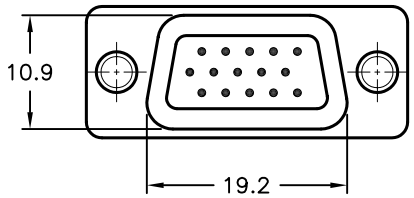

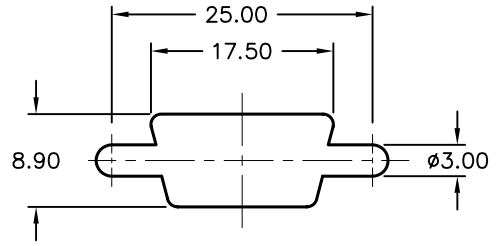

PANEL CUTOUT

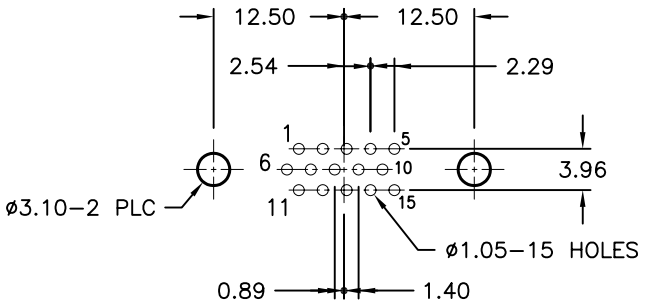

PCB LAYOUT

Specifications:

1. Shell: Steel, Tin Plated
2. Insulator: PBT +30% Fiber Glass, Black UL94V-0 Rated
3. Contact: Brass, Machined-Pin Gold Plated over Nickel
4. Current Rating: 5 AMPS
5. Contact Resistance: 15 miliohms Max
6. Insulation Resistance: 1000 Megohms Min
7. Voltage: 500 VAC for 1 Minute
8. Temperature: -50°C to +100°C

DISCLAIMER:
ALL STATEMENTS AND TECHNICAL INFORMATION CONTAINED HEREIN ARE BASED UPON INFORMATION AND/OR TESTS WE BELIEVE TO BE ACCURATE AND RELIABLE. SINCE CONDITIONS OF USE ARE BEYOND OUR CONTROL, THE USER SHALL DETERMINE THE SUITABILITY OF THE PRODUCT FOR THE INTENDED USE AND ASSUME ALL RISK AND LIABILITY WHATSOEVER IN CONNECTION THEREWITH.

TOLERANCES:
Unless Otherwise Specified
.X ±0.35 [0.014]
.XX ±0.15 [0.006]

DRAWN BY:	DATE:
EKLAS ODISH	07/25/06
CHECKED BY:	DATE:
SAMI ALNADI	07/25/06
APPROVED BY:	DATE:
HISHAM ODISH	07/25/06

DRAWING TITLE: 15 Pin High-Density D-Sub DIP Plug

SIZE	DWG. NO.	ELECTRONIC FILE	REV
A	SPC15402	79K4984.DWG	A

SCALE: NTS | U.O.M.: mm [INCHES] | SHEET: 1 OF 1