REVISIONS					
REV.	ECN NO.	LOCATION	DESCRIPTION	DATE	DESIGN
A0	N/A		INITIAL RELEASE	/	/
A1	N/A		图面升级整理图面	2025.03.04	阿树

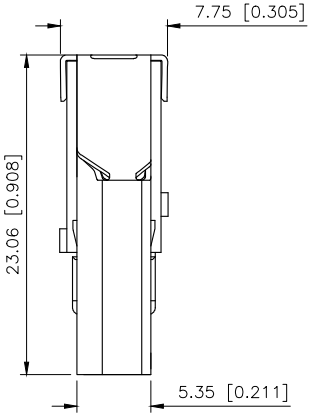

SPECIFICATIONS
1.OPERATINGCURRENT:0.5A MAX.
2.OPERATION TEMPERATURE:−25 TO +85
3.DIELECTRICWITHSTANDING VOLTAGE:
500Volts AC BETWEEN
ADIACENT TERMINAL(UNMATE)
300Volts AC BETWEEN
ADIACENT TERMINAL(MATE)
4.INSULATION RESISTANCE:
100Mohm MIN(UNMATED);10Mohm MIN.(MATED)
5.HDMI SPECIFICATION COMPLIANCE

A71−06H0−1X1N1

1:Au 1U"
5:Au 15U"
6:Au 30U"

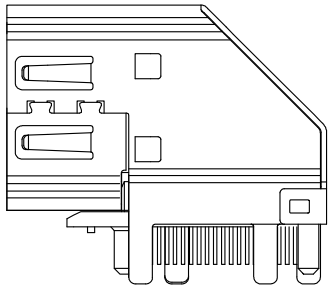

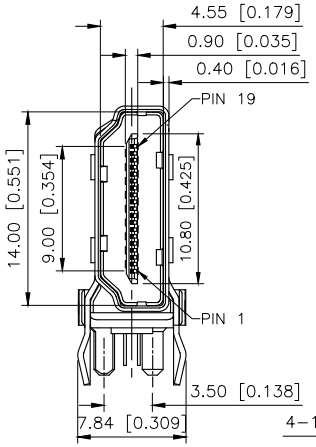

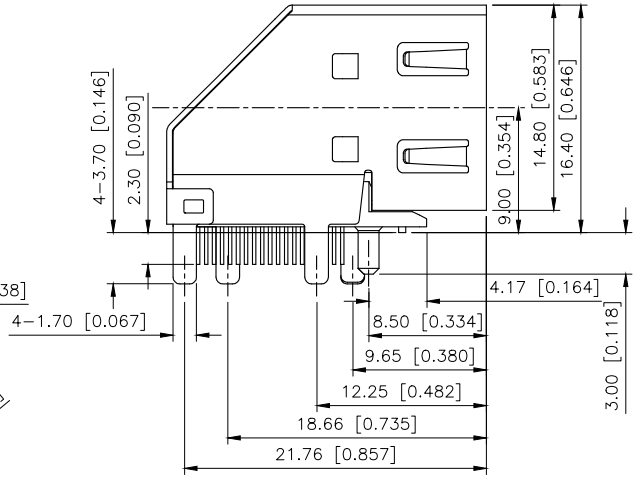

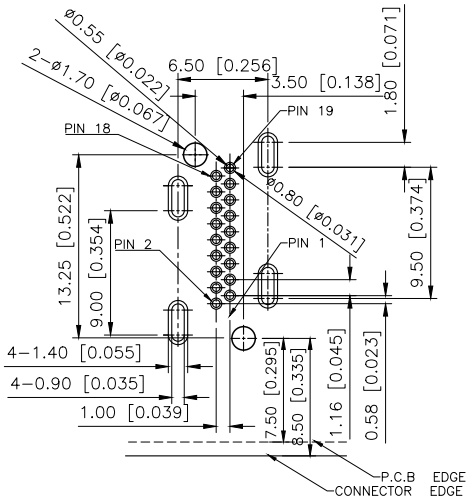

RECOMMENDED PCB LAYOUT (TOP VIEW)
TOLERANCE: ±0.05mm
ORDER INFORMATION

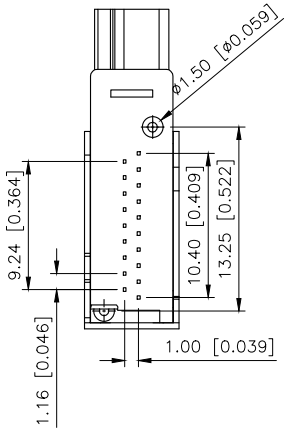

4	DUST COVER	1	THERMOPLASTIC UL94V−0
3	CONTACTS	19	COPPER ALLOY,GOLD PLATED OVER NICKEL ON CONTACT AREA AND 100u" MIN.TIN PLATED OVER NICKEL ON SOLDER TAILS
2	HOUSING	1	THERMOPLASTIC UL94V−0
1	SHELL	1	COPPER ALLOY OR SPCC, NICKEL PLATED

AuGLAR	±5°
X.	±0.40
X.x	±0.30
X.xx	±0.20
X.xxx	±0.15
UNSPECIFIED TOLERAuCES	

XKB Connection

DESIGN	阿树	VIEW:	MODEL TYPE: HDMI CONNECTOR
CHECKED		UNIT: mm/in	PART NO.: A71−06H0−1X1N1
APPROVED		SIZE: A4	DWG NO.:

XKB INDUSTRIAL PRECISION CO.,LIMITED

SCALE	PAGE	REVISION
N/A	1/1	A1

www.helloxkb.com www.helloxkb.cn www.xk−dg.cn