Copyright FCI.

FCI
FCIconnect.com

PRODUCT NUMBER
20020010–XXXXXXXLF

20020010– □ □ □ □ □ 0 □ L F

PITCH
C: 3.50 mm
D: 3.81 mm
G: 5.00 mm
H: 5.08 mm

POLES
02: 2 POLES
03: 3 POLES
04: 4 POLES
24: 24 POLES

LF : NOTED RoHS COMPATIBLE

1 : STANDARD PRODUCT W/ BOX PACKING

SCREW CODE

CODE	SCREW TYPE		AVAILABILTY
A	–/+	⊕	ON REQUEST ONLY
B	–	⊖	STANDARD

HOUSING CODE

CODE	COLOR	AVAILABILTY
1	GREEN(RAL 6018/T)	STANDARD
2	BLACK	ON REQUEST ONLY
3	GREY(RAL 7004/P)	ON REQUEST ONLY
4	BLUE(RAL 5015/A)	ON REQUEST ONLY

PROPERTY TABLE

			02–350	02–381	02–500	02–508
FCI SERIES NAME			02–350	02–381	02–500	02–508
PITCH (mm)			3.50	3.81	5.00	5.08
VOLTAGE RATING (VAC)			300	300	300	300
CURRENT RATING (A)		cULus	8	8	12	12
		VDE	10	10	NA	NA
APPLICABLE WIRE RANGE (AWG)		1–WIRE	16~28	16~28	12~24	12~24
		2–WIRE	20	20	18	18
WIRE CROSS SECTION (mm^2)	SOLID	1–WIRE	1.5	1.5	2.5	2.5
		2–WIRE	0.5	0.5	1.0	1.0
	STRANDED	1–WIRE	1.5	1.5	2.5	2.5
		2–WIRE	0.75	0.75	1.5	1.5
OPENING CONTACT HOUSING(mm^2)			2.8x1.7	2.8x1.7	2.6x3.3	2.6x3.3
WIRE STRIP LENGTH(mm)			6~7	6~7	6~7	6~7
TORQUE +/–10% (N–m/Lb–in)			0.19/1.7	0.19/1.7	0.4/3.5	0.4/3.5
SCREW			M2x0.4	M2x0.4	M3x0.5	M3x0.5
WITHSTANDING VOLTAGE (kV)		cULus	1.6	1.6	1.6	1.6
		VDE	2.5	2.5	NA	NA
OPERATING TEMP. (℃)			–40~+115	–40~+115	–40~+115	–40~+115
POLES AVAILABLE			02~24	02~24	02~24	02~24
SAFETY CERTIFICATE			c UR us, VDE		c UR us	

NOTES:
1. MATERIALS
   1–1 HOUSING: THERMALPLASTIC RESIN, UL 94V–0 RATED.
   1–2 SCREW: STEEL, ZINC PLATED.
   1–3 CLAMP: COPPER ALLOY, NICKEL PLATED.
   1–4 TERMINAL: COPPER ALLOY, TIN PLATED.
2. PRODUCT SPECIFICATION REFER TO FCI GS–12–625.
3. PRODUCT PACKING SPECIFICATION REFER TO FCI GS–14–1394.
4. FCI, SAFETY CERTIFICATE LOGO AND SERIES NAME TO BE SHOWN ON PRODUCT SURFACE.
5. THE PRODUCTS WHERE THE PART NUMBER END IN "LF" MEET THE EUROPEAN UNION DIRECTIVE AND OTHER COUNTRY REGULATIONS AS DESCRIBED IN GS–22–008.

mat'l. code | surface ASME Y14.5 | tolerance ASME Y14.5 | projection | product family: TERMINAL BLOCK

tolerances unless otherwise specified: angles X°±1°; linear X.±0.5, X.X±0.3, X.XX±0.1; MM [INCH]; scale

title: TERMINAL BLOCK PLUGGABLE PLUG, BACK SIDE HOOK

ltr	ecn no	dr	date
A	T10–0029	JH	120909
B	T10–0042	WL	030310
C	T10–0082	WL	080510
D	T10–0158	WL	100410
E	T11–0013	WL	040811
F	T–005908	WL	091311

dr	JASON HSU	120909
engr	JASON HSU	120909
chr	GARY HSIEH	120909
appd	JOSEPH HSIA	120909

dwg no 20020010 | sheet 1 of 5 | size A4

type CUSTOMER Drawing

sheet index	revision	F	F	F	F	F
	sheet	1	2	3	4	5

Copyright FCI.

PRODUCT NUMBER	SERIES NAME	PITCH
20020010-CXXXXXXLF	02-350	3.50 mm

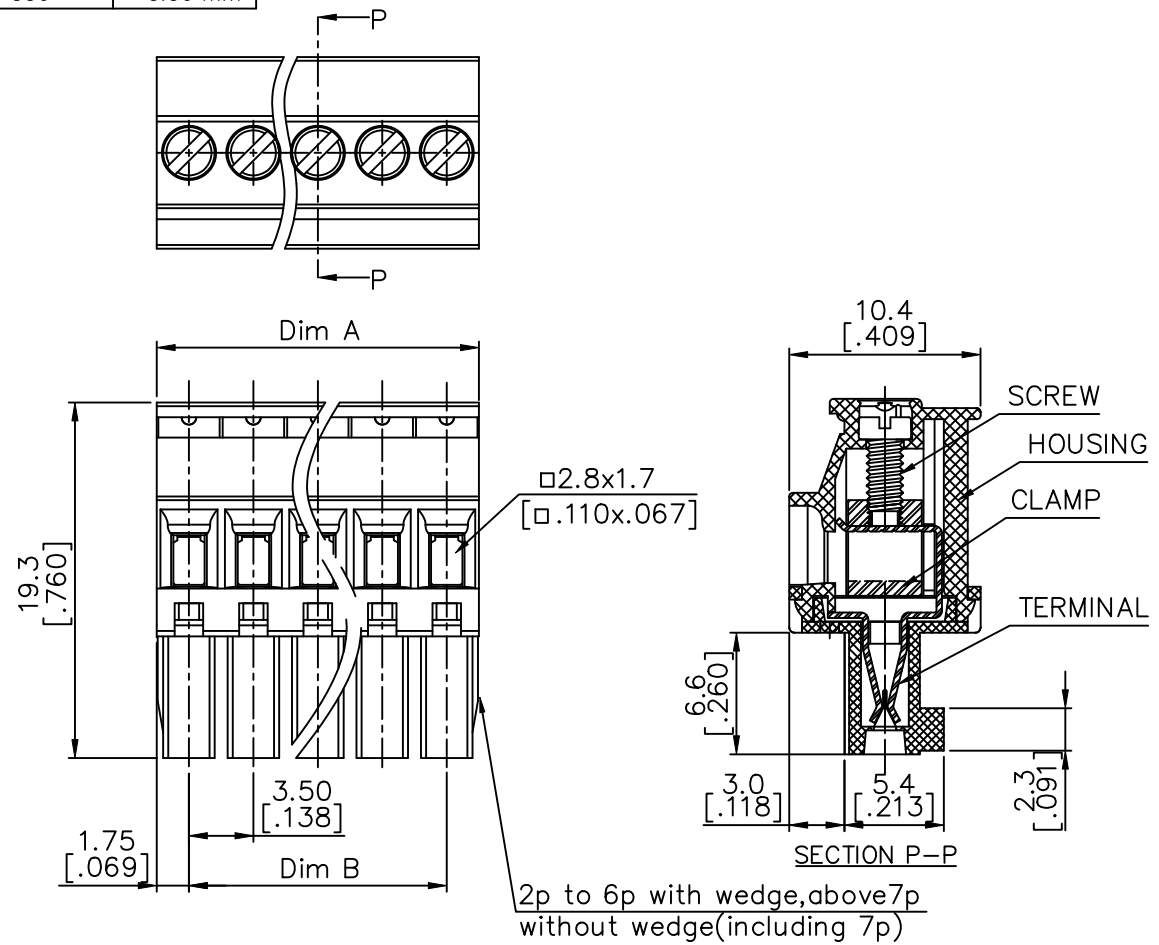

N = Number of poles
Dim A=Nx3.5[.138]
Dim B=(N-1)x3.5[.138]

POLES	TOLERANCE
2-6p	±0.15[.006]
7-12p	±0.20[.008]
13-18p	±0.25[.010]
19-24p	±0.30[.012]

mat'l. code				surface ASME Y14.5	tolerance ASME Y14.5	projection	product family: TERMINAL BLOCK
ltr	ecn no	dr	date	tolerances unless otherwise specified			title: TERMINAL BLOCK PLUGGABLE PLUG, BACK SIDE HOOK
F				angles X°±1°	linear X.±0.5 / X.X±0.3 / X.XX±0.1	MM [INCH]	
						scale	
				dr	JASON HSU	120909	dwg no 20020010 sheet 2 of 5 size A4
				engr	JASON HSU	120909	
				chr	GARY HSIEH	120909	type: CUSTOMER Drawing
				appd	JOSEPH HSIA	120909	
sheet index	revision sheet						

Copyright FCI.

PRODUCT NUMBER	SERIES NAME	PITCH
20020010-DXXXXXXXLF	02-381	3.81 mm

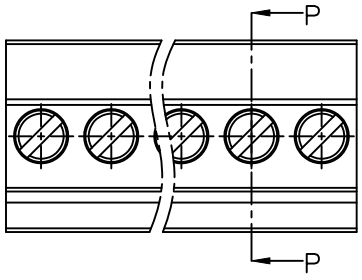

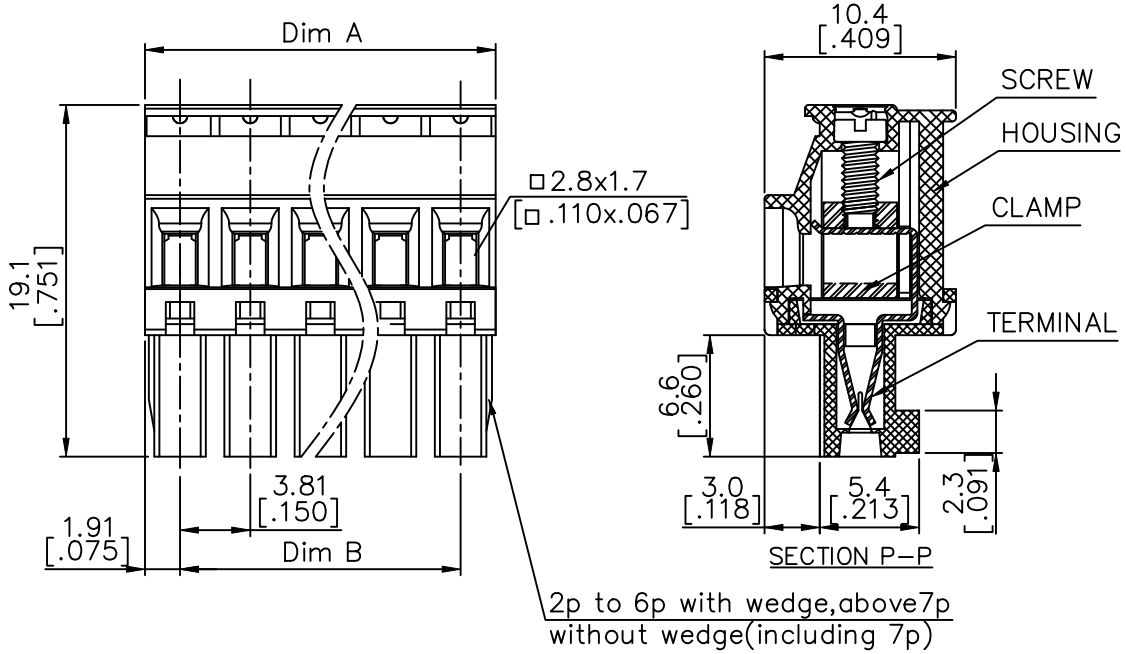

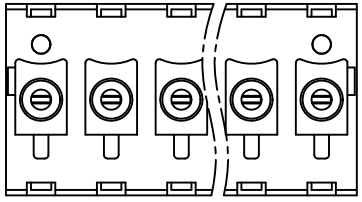

N = Number of poles
Dim A=Nx3.81[.150]
Dim B=(N-1)x3.81[.150]

POLES	TOLERANCE
2-6p	±0.15[.006]
7-12p	±0.20[.008]
13-18p	±0.25[.010]
19-24p	±0.30[.012]

mat'l. code				surface ASME Y14.5	tolerance ASME Y14.5	projection	product family: TERMINAL BLOCK
ltr	ecn no	dr	date	tolerances unless otherwise specified			title: TERMINAL BLOCK PLUGGABLE PLUG, BACK SIDE HOOK
F				angles	linear: X.±0.5 / X.X±0.3 / X.XX±0.1	MM [INCH]	
				X°±1°		scale	
				dr	JASON HSU	120909	dwg no: 20020010 sheet 3 of 5 size: A4
				engr	JASON HSU	120909	
				chr	GARY HSIEH	120909	
				appd	JOSEPH HSIA	120909	type: CUSTOMER Drawing
sheet index	revision sheet						

Copyright FCI.

PRODUCT NUMBER	SERIES NAME	PITCH
20020010-GXXXXXXLF	02-500	5.00 mm

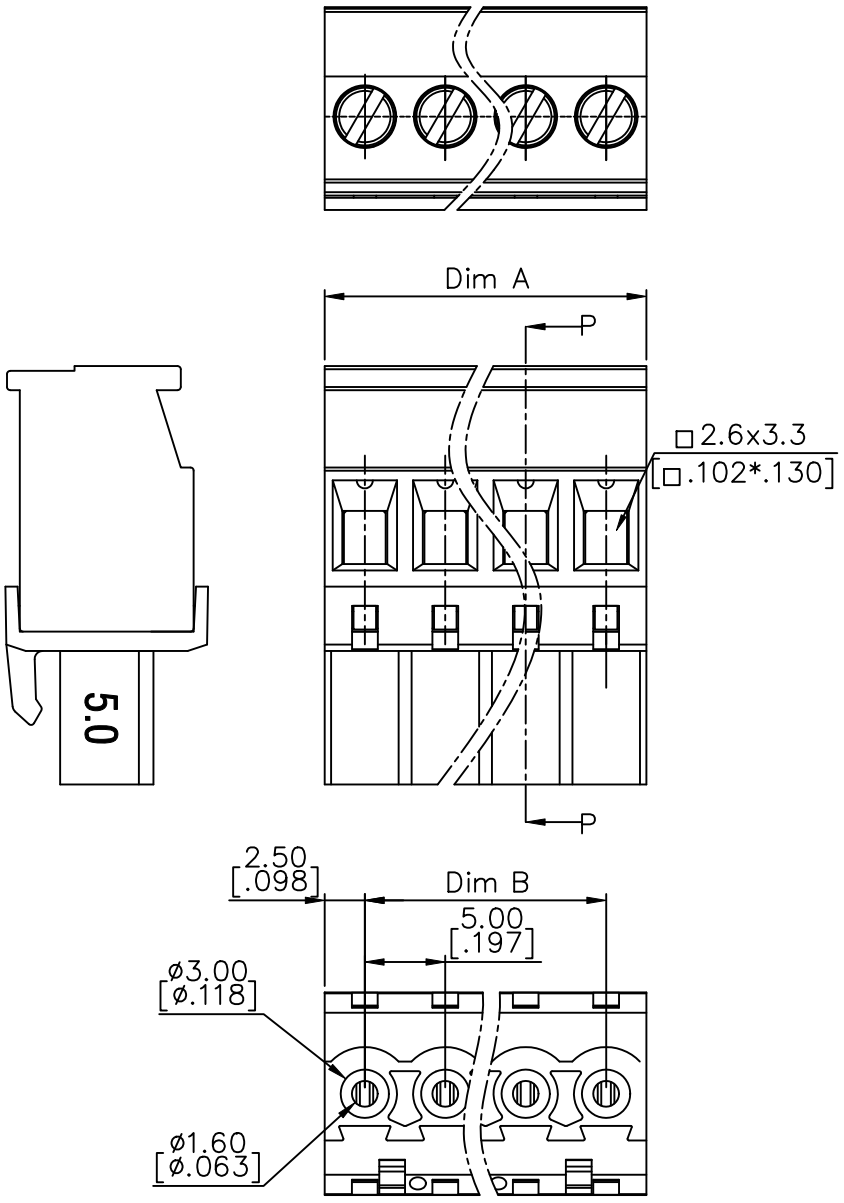

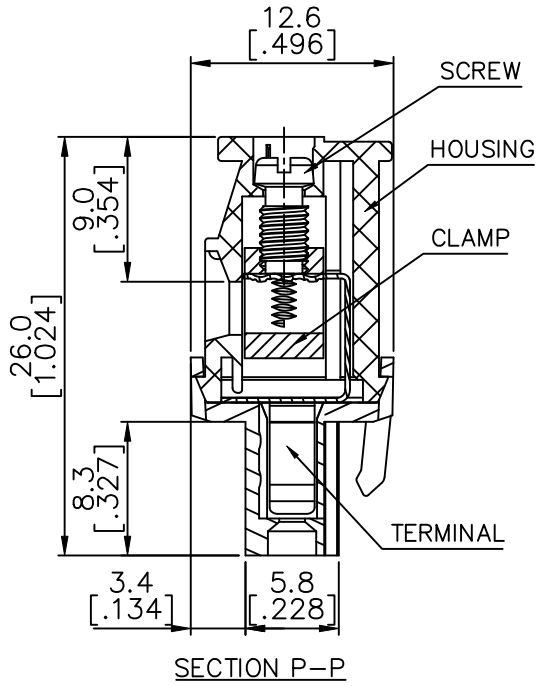

SECTION P-P

N = Number of poles
Dim A=Nx5.0[.197]
Dim B=(N-1)x5.0[.197]

POLES	TOLERANCE
2-6p	±0.15[.006]
7-12p	±0.25[.010]
13-18p	±0.30[.012]
19-24p	±0.40[.016]

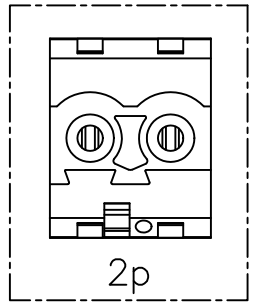

mat'l. code				surface ASME Y14.5	tolerance ASME Y14.5	projection	product family: TERMINAL BLOCK
ltr	ecn no	dr	date	tolerances unless otherwise specified			title: TERMINAL BLOCK PLUGGABLE PLUG, BACK SIDE HOOK
F				angles	linear X.±0.5	MM [INCH]	
				X°±1°	X.X±0.1 / X.XX±0.1	scale	
				dr JASON HSU 120909			dwg no 20020010 sheet 4 of 5 size A4
				engr JASON HSU 120909			
				chr GARY HSIEH 120909			
				appd JOSEPH HSIA 120909			type: CUSTOMER Drawing
sheet index	revision sheet						

Copyright FCI.

FCIconnect.com

PRODUCT NUMBER	SERIES NAME	PITCH
20020010-HXXXXXXLF	02-508	5.08 mm

N = Number of poles
Dim A=Nx5.08[.200]
Dim B=(N-1)x5.08[.200]

POLES	TOLERANCE
2-6p	±0.15[.006]
7-12p	±0.25[.010]
13-18p	±0.30[.012]
19-24p	±0.40[.016]

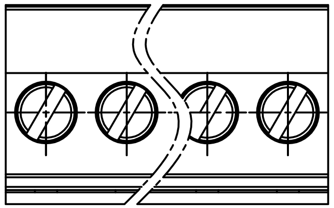

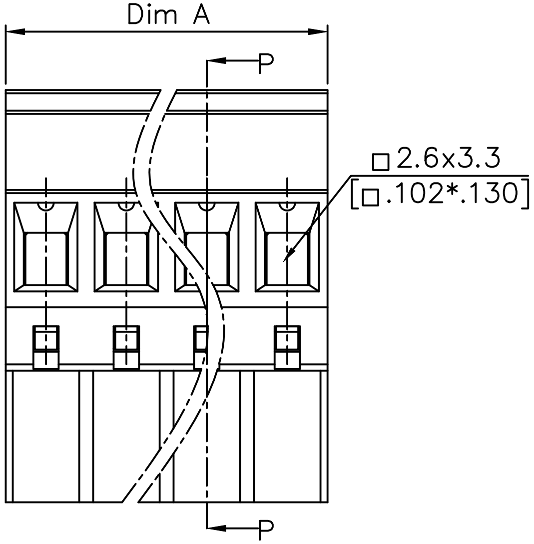

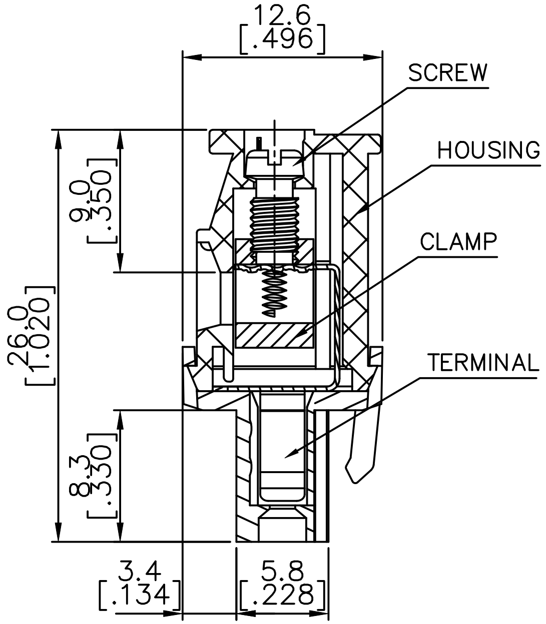

SECTION P-P

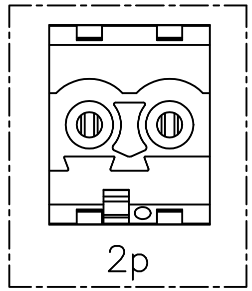

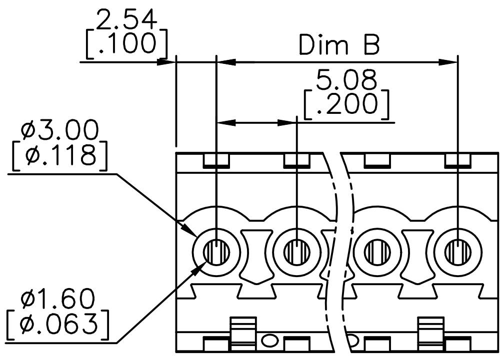

mat'l. code	surface ASME Y14.5	tolerance ASME Y14.5	projection	product family	TERMINAL BLOCK
ltr / ecn no / dr / date	tolerances unless otherwise specified		MM [INCH]	title	TERMINAL BLOCK PLUGGABLE PLUG, BACK SIDE HOOK
F	angles X°±1°	linear X.±0.5 / X.X±0.3 / X.XX±0.1	scale	dwg no 20020010	sheet 5 of 5 / size A4
	dr JASON HSU 120909			type	CUSTOMER Drawing
	engr JASON HSU 120909				
	chr GARY HSIEH 120909				
	appd JOSEPH HSIA 120909				
sheet index	revision sheet				

Mouser Electronics

Authorized Distributor

Click to View Pricing, Inventory, Delivery & Lifecycle Information:

Amphenol:
20020010-G061B01LF 20020010-G021B01LF 20020010-H041B01LF 20020010-H101B01LF 20020010-G031B01LF 20020010-D021B01LF 20020010-H081B01LF 20020010-G041B01LF 20020010-H031B01LF 20020010-G101B01LF 20020010-H021B01LF 20020010-G081B01LF 20020010-H061B01LF 20020010-H091B01LF 20020010-D031BC1LF 20020010-G161B61LF 20020010-D062B01LF 20020010-G032B01LF 20020010-G082B01LF

FCI / Amphenol:
20020010-G122B11LF 20020010-H041BA1LF