PART NO.	ENG. NO.	CKT SIZE	MATERIAL (SEE NOTE 1)
39-01-4030	5557-03R2	3	UL 94V-2
39-01-4031	5557-03R2-210	3	UL 94V-0
39-01-5039	5557-03R2-BL	3	UL 94V-2, BLACK
46999-0287	5557-03R2-400	3	UL 94V-0, BLACK

LEGEND

5557-03R2-***

CKT SIZE

RECEPTACLE

MATERIAL OPTION:
(SEE NOTE 1)

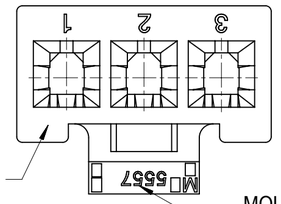

SEE NOTE 11

MOLEX I.D.,
ENGINEERING NO.,
CAVITY NO.

NOTES:
1. MATERIAL:
   "BLANK"=NYLON 6/6, UL94V-2, LOW HALOGEN, COLOR: NATURAL
   "210"=NYLON 6/6, UL94V-0, LOW HALOGEN, COLOR: NATURAL
   "BL"=NYLON 6/6, UL94V-2, LOW HALOGEN, COLOR: BLACK
   "400"=NYLON 6/6, UL94V-0, LOW HALOGEN, COLOR: BLACK
2. FINISH: NOT APPLICABLE
3. PRODUCT SPECIFICATION: PS-5556-001
4. PACKAGING: PK-5557-002
5. PART MATES WITH MOLEX RIGHT ANGLE HEADER #5569-03A*, VERTICAL HEADER #5566-03A3* AND PLUG #5559-03P*.
6. PART TO BE USED WITH MOLEX FEMALE TERMINAL #5556.
7. WHEN MATING WITH ANOTHER CONNECTOR, THE CENTER CIRCUIT WILL "MAKE FIRST AND BREAK LAST".
8. PART IS NOT DESIGNED FOR CURRENT SHARING.
9. CONNECTOR ASSEMBLIES ARE NOT TO BE MATED OR UNMATED WHILE CIRCUITS ARE LIVE.
10. WIRES ARE TO BE DRESSED IN SUCH A MANNER TO ALLOW THE TERMINALS TO FLOAT FREELY IN THE POCKET.
11. "MX" TRADEMARK MAY BE LOCATED ON LATCH OR SURFACE INDICATED. CAVITY NO. MAY BE LOCATED ON EITHER SIDE OF ENGINEERING NO. ON LATCH.
12. PART CONFORMS TO CLASS "B" REQUIREMENTS OF COSMETIC SPECIFICATION PS-45499-002.
13. BUBBLE IS ACCEPTABLE ON LATCH AREA.
14. THIS RADIUS MAY OR MAY NOT APPEAR ON HOUSING.

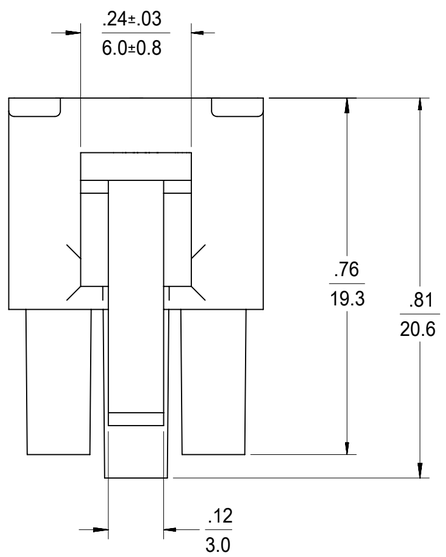

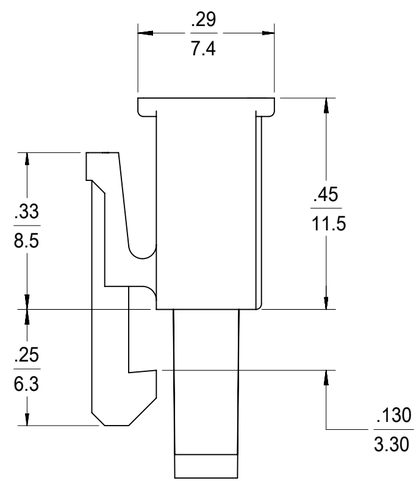

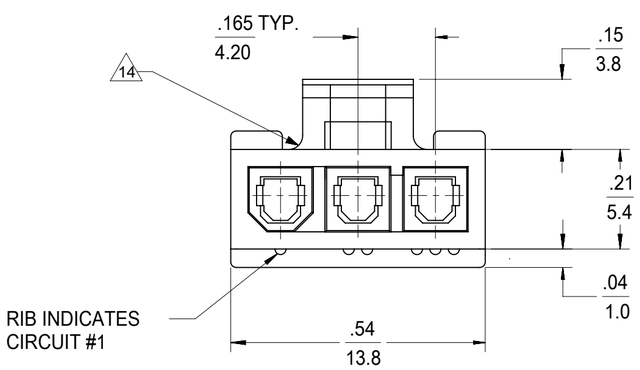

RIB INDICATES
CIRCUIT #1

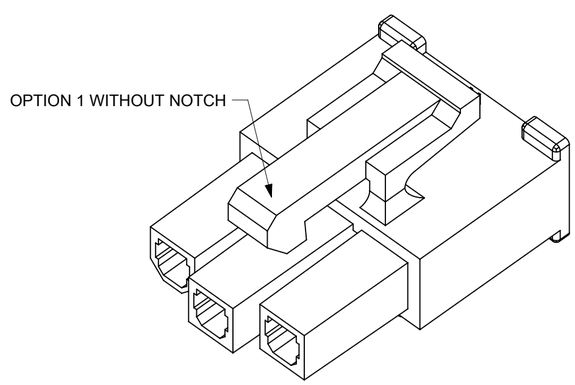

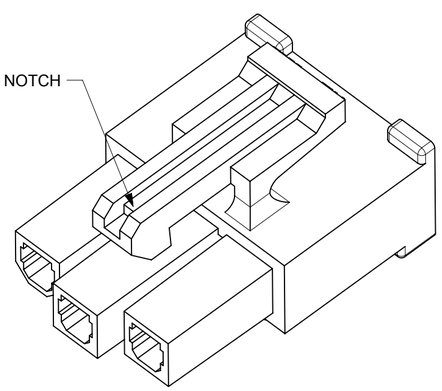

OPTION 2

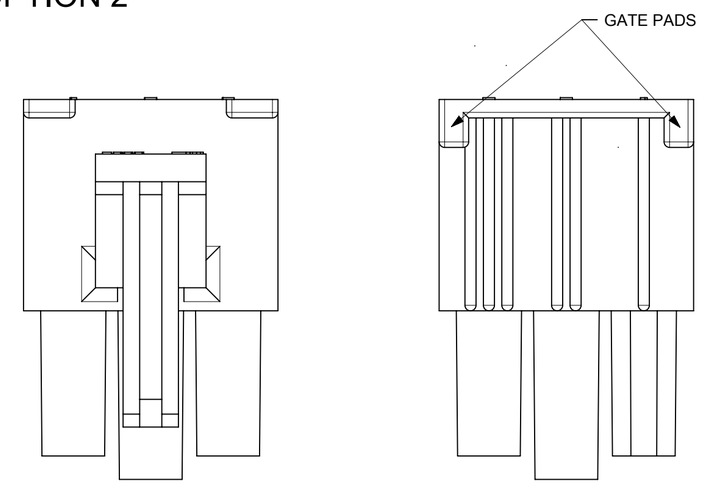

BOTH STRUCTURES ARE ACCECPTABLE.

THIS DRAWING REPLACES DRAWING SD-5557-03R2*

DOCUMENT STATUS	P1	RELEASE DATE	2024/02/28 06:24:28

THIS DRAWING CONTAINS INFORMATION THAT IS PROPRIETARY TO MOLEX ELECTRONIC TECHNOLOGIES, LLC AND SHOULD NOT BE USED WITHOUT WRITTEN PERMISSION

DIMENSION UNITS	SCALE
IN/MM	NTS

GENERAL TOLERANCES (UNLESS SPECIFIED)

	MM	INCH
4 PLACES	±	±
3 PLACES	±	± 0.01
2 PLACES	± 0.25	± 0.015
1 PLACE	± 0.38	±
0 PLACES	±	±
ANGULAR TOL	± 0.5 °	

DRAFT WHERE APPLICABLE MUST REMAIN WITHIN DIMENSIONS

CURRENT REV DESC:

EC NO: 728295
DRWN: JERRYW8 2023/12/21
CHK'D: XQZHANG 2024/02/28
APPR: XQZHANG 2024/02/28

INITIAL REVISION:
DRWN: GEP 1990/10/02
APPR: RAS 1990/10/02

THIRD ANGLE PROJECTION | DRAWING: C-SIZE | SERIES: 5557

molex

3 CIRCUIT RECEPTACLE,
(MINI-FIT JR.) (MAKE-FIRST/BREAK-LAST)

PRODUCT CUSTOMER DRAWING

DOCUMENT NUMBER	DOC TYPE	DOC PART	REVISION
55570302-SD	PSD	000	A2

MATERIAL NUMBER	CUSTOMER	SHEET NUMBER
SEE CHART	GENERAL MARKET	1 OF 1

FORMAT: Eng-legs-master-tb-prod-C
REVISION: E1
DATE: 2021/05/21