THIS DRAWING IS UNPUBLISHED. RELEASED FOR PUBLICATION 20
© COPYRIGHT 20 BY TYCO ELECTRONICS CORPORATION. ALL RIGHTS RESERVED.

PART NUMBER	REV	TERMINATOR	FEED TYPE	DESCRIPTION
1426644-1	A	LEADMAKER	MECH POST FEED	CUTS CARRIER
1426644-2	A	BENCH	MECH PRE FEED	CUTS CARRIER
1426644-6	A	LEADMAKER	MECH POST FEED	CONTINUOUS CARRIER
7-1426644-1	A	LEADMAKER	MECH POST FEED	-1 AND SPARE PARTS
7-1426644-2	A	BENCH	MECH PRE FEED	-2 AND SPARE PARTS
7-1426644-6	A	LEADMAKER	MECH POST FEED	-6 AND SPARE PARTS
7-1426644-7	A	-	-	SPARE PARTS KIT

SET UP GAGE 458637-3

LOC	DIST
A	66

REVISIONS

P	LTR	DESCRIPTION	DATE	DWN	APVD
	A	SEE ECO-07-019475	20AUG2007	LJL	MC
	A1	SEE ECR-07-021685	13SEP2007	LL	MC

CRIMP DATA DELPHI TERMINAL DELPHI CRIMP SPECS 7

TERMINAL NAME: TAXI TERMINAL M M/P 150 SEALED

CRIMP	SIZE	TYPE	RANGE
WIRE	2.03 [.080 IN]	F	0.35-0.50mm²
INSUL	4.06 [.160 IN]	O	1.47-2.40 [.058-.094 IN] 5

WIRE STRIP LENGTH 5.60 [.220 IN]

APPL INSTRUCTIONS 408-8322

TERMINAL APPL SPEC - - - -

FEED 12.70 [.500 IN]

TERMINALS APPLIED

TE TERM PN	MANUF TERM PN	TE SEAL PN	MANUF SEAL PN
1572275-1	12077628	286934-1	12052925
1572275-2	12191888	286934-2	15324974
1572275-3	15359163	1572277-1	12048087
-	-	-	-

WIRE SIZE	CRIMP HEIGHT	PIN PN & LENGTH [IN]
0.50mm² 8	1.15 ±0.05 [.045 ±.002 IN]	3-354779-8 [.3180]
9 0.35mm² 8	1.10 ±0.05 [.043 ±.002 IN]	4-354779-2 [.3200]
-	-	
-	-	
-	-	
-	-	
-	-	
-	-	
-	-	

1. RECOMMENDED SPARE PARTS.
2. GREASE RAM, CAM, CAM FOLLOWER AND FEED ROD LIGHTLY.
3. CERTAIN TERMINALS REQUIRE LUBRICATION. REFER TO THE APPLICATOR INSTRUCTION SHEET FOR MORE INFORMATION.
4. LUBRICATE DAILY PER THE APPLICATOR INSTRUCTION SHEET SUPPLIED WITH THE APPLICATOR.
5. THIS APPLICATOR APPLIES TERMINAL WITH A SEAL. INSULATION DIA QUOTED IS RANGE OF TERMINAL. WIRE INSULATION DIA IS DEPENDENT ON SEAL BEING APPLIED. FOR SEAL PART NUMBERS, AS SHOWN ABOVE, INS RANGE IS 1.29-1.70.
6. APPLY TORQ-SEAL IN ALLEN SOCKET TO FILL HOLE AFTER FLAT HD HAS BEEN ADJUSTED TO CORRECT HEIGHT AT QUALIFICATION. APPLY #1-23419-5 LOC-TITE TO THREADS.
7. CRIMP DATA SUPPLIED BY THE TERMINAL MANUFACTURER.
8. SEE DELPHI DATA SHEET FOR SPECIFIC WIRE DETAILS.
9. 0.35mm WIRE SIZE MAX TENSILE ACHIEVABLE 50N.

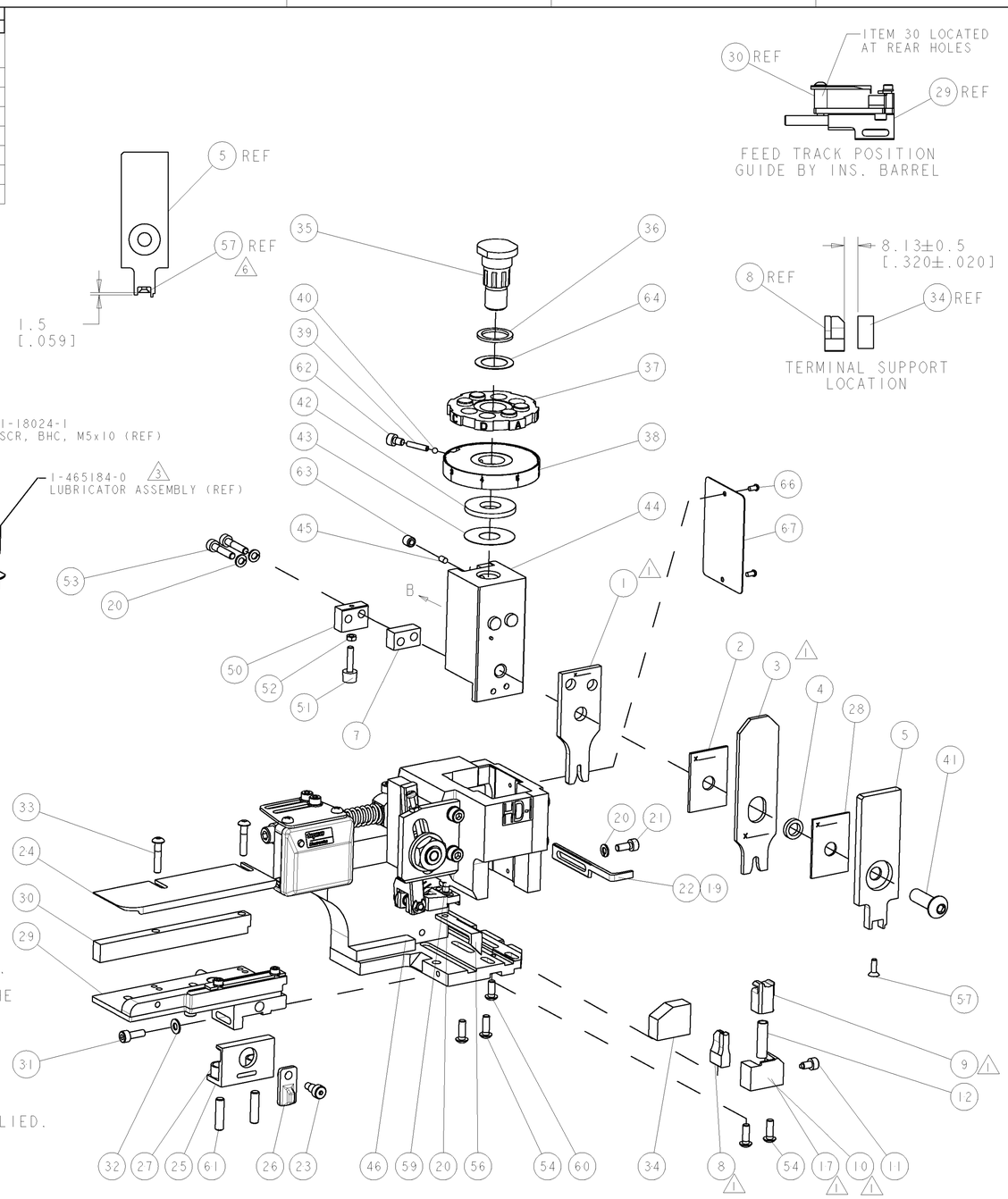

ITEM NO	DESCRIPTION	PART NO	-77	-76	-72	-71	-6	-2	-1
73	-	-	-	-	-	-	-	-	-
72	-	-	-	-	-	-	-	-	-
71	DOCUMENTATION PACKAGE	1338705-1	-	1	1	1	1	1	1
70	-	-	-	-	-	-	-	-	-
69	-	-	-	-	-	-	-	-	-
68	-	-	-	-	-	-	-	-	-
67	PLATE, IDENTIFICATION	461264-1	-	1	1	1	1	1	1
66	SCREW, DRIVE	21017-2	-	2	2	2	2	2	2
65	-	-	-	-	-	-	-	-	-
64	WASHER, FLAT PRECISION	986950-1	-	1	1	1	1	1	1
63	SCR, SET, CUP POINT M6 X 6.0	3-18031-0	-	1	1	1	1	1	1
62	SCR, SKT HD CAP M4 X 6.0	18023-9	-	1	1	1	1	1	1
61	SCR, SET, FLT POINT M5 X 20.0	2-18032-5	-	2	2	2	2	2	2
60	SCR, BTN SKT HD CAP (M4 X 10.0)	18024-7	-	1	1	1	1	1	1
59	SCR, HEX HD CAP M4 X 8.0	5-18022-2	-	1	1	1	1	1	1
58	-	-	-	-	-	-	-	-	-
57	SCR, FLT SKT HD CAP M3 X 10.0	985575-3	-	1	1	1	1	1	1
56	PAWL, FEED	1338685-1	-	1	1	1	1	1	1
55	-	-	-	-	-	-	-	-	-
54	SCR, BTN SKT HD CAP (M4 X 12.0)	18024-8	-	4	4	4	4	4	4
53	SCR, SKT HD CAP M4 X 20.0	1-18023-4	-	2	2	2	2	2	2
52	NUT, HEX, REG M3	18030-1	-	1	1	1	1	1	1
51	BUMPER, HOLD DOWN	811242-5	-	1	1	1	1	1	1
50	SPACER, TONKER	690753-2	-	1	1	1	1	1	1
49	SCR, BTN SKT HD CAP (M3 X 10.0)	18024-3	-	1	1	1	1	1	1
48	CAM, UNIVERSAL PRE FEED	1338675-1	-	-	1	-	-	1	-
47	CAM, UNIVERSAL POST-FEED	1338676-1	-	1	-	1	1	-	1
46	APPLICATOR SUBASSEMBLY, HDI	1320999-3	-	1	1	1	1	1	1
45	PLUG,NYLON	690191-1	-	1	1	1	1	1	1
44	RAM	1338660-1	-	1	1	1	1	1	1
43	SHIM SUB-ASSY	690125-1	-	1	1	1	1	1	1
42	WASHER, RAM (.115)	690124-1	-	1	1	1	1	1	1
41	SCR, BTN SKT HD CAP (M8 X 25.0)	2-18024-6	-	1	1	1	1	1	1
40	BALL, STEEL	23241-1	-	1	1	1	1	1	1
39	SPRING, COMPRESSION	2-22278-7	-	1	1	1	1	1	1
38	DISC, ADJUST, INSULATION CRIMP	1320922-1	-	1	1	1	1	1	1
37	WIRE DISC, ASSEMBLY	354777-1	-	1	1	1	1	1	1
36	SPRING, COMPRESSION	22480-5	-	1	1	1	1	1	1
35	POST, RAM	690212-1	-	1	1	1	1	1	1
34	SUPPORT, TERMINAL	2-1320934-2	-	1	1	1	1	1	1
33	SCR, BTN SKT HD CAP (M4 X 20.0)	1-18024-0	-	2	2	2	2	2	2
32	WASHER, FLAT, REG M4	18027-2	-	1	1	1	1	1	1
31	SCR, SKT HD CAP M4 X 12.0	1-18023-2	-	1	1	1	1	1	1
30	SPACER, STRIP GUIDE	1-1320908-7	-	1	1	1	1	1	1
29	STRIP GUIDE ASSEMBLY	1633073-1	-	1	1	1	1	1	1
28	SPACER, CRIMPER	1-455888-0	-	1	1	1	1	1	1
27	SPRING, COMPRESSION	1-22284-0	-	2	2	2	2	2	2
26	LEVER, DRAG RELEASE	356835-1	-	1	1	1	1	1	1
25	DRAG, TERMINAL	240792-1	-	1	1	1	1	1	1
24	PLATE, STRIP GUIDE	1320928-5	-	1	1	1	1	1	1
23	SCR, SKT HD SHLDR 5.0 DIA X 6.0	980371-4	-	1	1	1	1	1	1
22	STRIPPER	690472-2	-	1	-	1	1	-	1
21	SCR, SKT HD CAP M4 X 10.0	1-18023-1	-	1	1	1	1	1	1
20	WASHER, SPRG LOCK, REG M4	18025-2	-	4	4	4	4	4	4
19	STRIPPER	690472-1	-	-	1	-	-	1	-
18	-	-	-	-	-	-	-	-	-
17	SHEAR HOLDER, FRONT	1338684-2	-	1	-	-	1	-	-
16	-	-	-	-	-	-	-	-	-
15	-	-	-	-	-	-	-	-	-
14	-	-	-	-	-	-	-	-	-
13	-	-	-	-	-	-	-	-	-
12	SPRING, COMPRESSION	3-22280-3	-	1	1	1	1	1	1
11	STOP, SHEAR	356885-5	-	1	1	1	1	1	1
10	SHEAR HOLDER, FRONT, CUT	1-1320921-0	-	-	1	1	-	1	1
9	FLOATING SHEAR, FRONT	318707-3	-	1	1	1	1	1	1
8	ANVIL, COMBINATION .080	4-1633131-4	1	2	2	2	1	1	1
7	SPACER	7-240641-2	-	1	1	1	1	1	1
6	-	-	-	-	-	-	-	-	-
5	DEPRESSOR, SHEAR	1338680-1	-	1	1	1	1	1	1
4	BLOCK, CRIMPER SPACER	3-238011-3	-	1	1	1	1	1	1
3	CRIMPER, INSUL O PREMIUM	2-904741-5	1	2	2	2	1	1	1
2	SPACER, CRIMPER	1-455888-5	-	1	1	1	1	1	1
1	CRIMPER, WIRE PREMIUM	1-456405-3	1	2	2	2	1	1	1

VIEW B ROTATED 180°

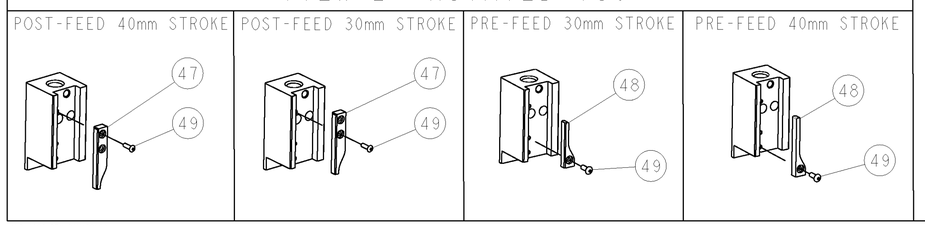

ITEM NO	DESCRIPTION	PART NO	-77	-76	-72	-71	-6	-2	-1
84	-	-	-	-	-	-	-	-	-
83	-	-	-	-	-	-	-	-	-
82	-	-	-	-	-	-	-	-	-
81	-	-	-	-	-	-	-	-	-
80	-	-	-	-	-	-	-	-	-
79	-	-	-	-	-	-	-	-	-
78	-	-	-	-	-	-	-	-	-
77	-	-	-	-	-	-	-	-	-
76	-	-	-	-	-	-	-	-	-
75	-	-	-	-	-	-	-	-	-
74	-	-	-	-	-	-	-	-	-

THIS DRAWING IS A CONTROLLED DOCUMENT FOR TYCO ELECTRONICS CORPORATION. IT IS SUBJECT TO CHANGE AND THE CONTROLLING ENGINEERING ORGANIZATION SHOULD BE CONTACTED FOR THE LATEST REVISION.

DIMENSIONS: mm [IN]

TOLERANCES UNLESS OTHERWISE SPECIFIED: 0 PLC ±- 1 PLC ±- 2 PLC ±- 3 PLC ±- 4 PLC ±- ANGLES ±-

MATERIAL - - FINISH - -

DWN 09JUL2007 L LOFTHOUSE
CHK
APVD 09JUL2007 M.CLIFFORD
PRODUCT SPEC -
APPLICATION SPEC See Table
WEIGHT -
CUSTOMER DRAWING

Tyco Electronics
Tyco Electronics Harrisburg, PA 17105-3608
NAME SIDE FEED HDI APPLICATOR
SIZE A CAGE CODE 00779 DRAWING NO 1426644
RESTRICTED TO -
SCALE 3:5 SHEET 1 OF 1 REV A1

OBSOLETE
NOT the LATEST REVISION

AMP 4805 REV 31MAR2000

Downloaded from Arrow.com.