SAMZO | REAC/ROHS

REV	ECN NO	DESRIPTION	DESIGN	APPROVAL	DATE
A1	NEW	Replace frame			2019.06.12

Technical Requirements:
1.Frequency: 0～300GHz
2.Impedance: 50 Ω
3.Voltage Standing Wave Ratio (VSWR): ≤ 1.35
4.Rated Voltage: 750V
5.Withstand Voltage: 2000V
6.Insulation Resistance: ≥ 5000M Ω
7.Contact Resistance:
Inner conductor ≤ 5 mΩ;
Outer conductor ≤ 5 mΩ

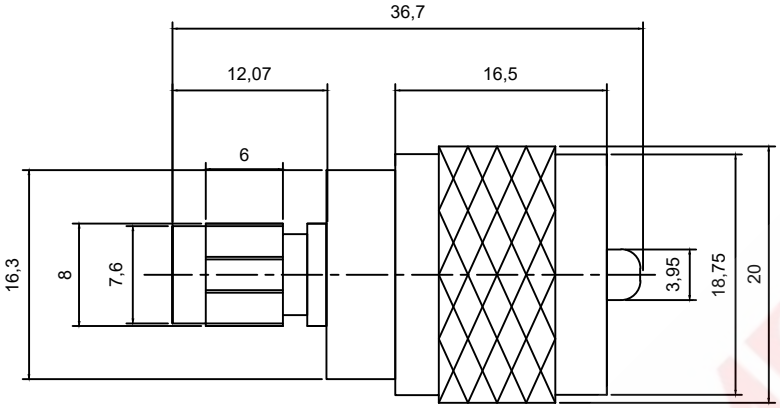

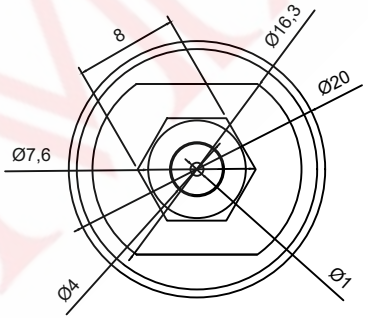

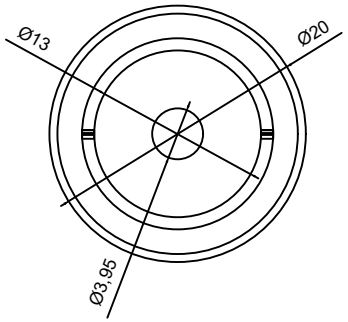

UHF-JJ-367-L0-M-S

- operation mode操作方式:转SMA
- Surface treatment镀层:亮镍. 金
- operation direction方向:180°垂直
- Length体长:36.7mm
- Product number编号:U-S.JJ
- Product series系列:UHF同轴射频连接器

ITEM	DESCRIPTION	MATERIAL	QTY	FINSH/COLOR					
C	SMA	黄铜	1	镀金					
C	插孔	HPB59-1	1	------				GENERAL TOLERANCE	
B	绝缘体	聚四氟乙烯	1	------				≥0~2<	±0.15
A	主体	黄铜	1	镀镍	DESIGN	WANGGUIFA	2018.06.12	≥2~5<	±0.25
					CHECKED	ZHENGUILAN	2018.06.12	≥0~2<	±0.15
					APPROVED	LILIANJIANG	2018.06.14	≥5	±0.35

FIRST VIEW

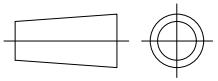

SCALE	1:1	UNIT	mm

The copyright belongs to samzo parts [China] Co., Ltd. please use the material after samzo parts agree to authorize. The final right of interpretation belongs to samzo parts.
WWW.KKK-JP.COM

SAMZO COMPONENTS
Electronic switch and connector manufacturer

TITLE:: UHF转SMA-JJ/ 转接头镀金
DWG NO: UHFJJ-P035
PART NO: UHFJJ-212057
MODEL NO: UHF-JJ-367-L0-M-S
NAME: UHF COAXIAL RF CONNECTOR