RoHS compliant
by exemption

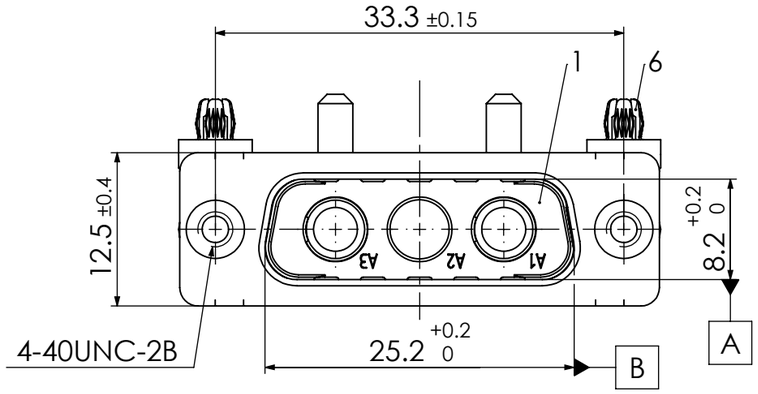

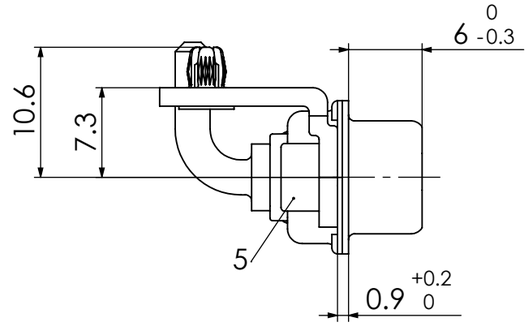

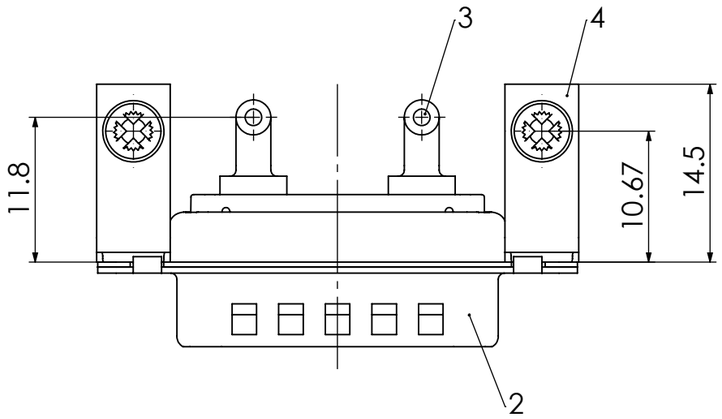

PCB hole pattern, mounting side

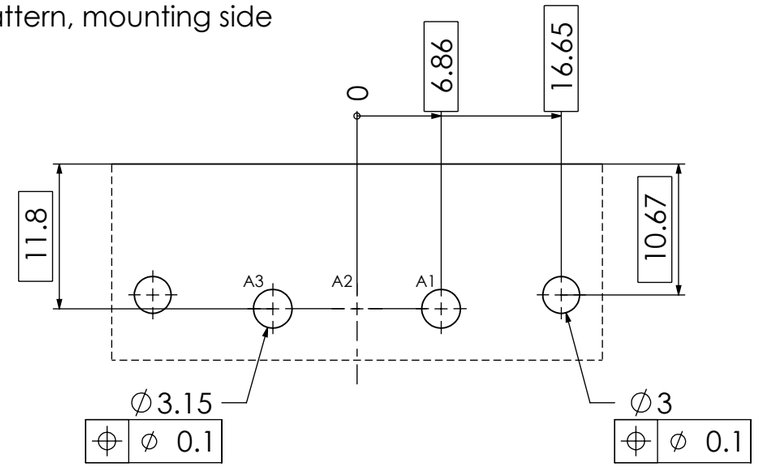

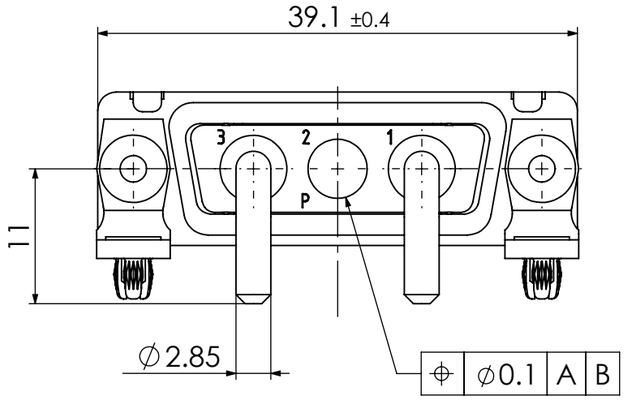

No.	St.	Part	Type Description/Material	Surface plating/Colour/Class
6	2	Snap-in rivet	PCB 1.6mm / Brass	tin plated
5	2	Clinch nut	MW 4-40 / Steel	tin plated
4	2	Bracket	F1080-13B / Steel	tin plated
3	2	High power contact	FMP008P104R	20A
2	1	Shell	Steel	tin plated
1	1	Insulator	PBT (-55°C to +130°C) acc. UL94V-0	green

FUNCTIONAL SYMBOLS
= 0
= 0
= 0

THIS DRAWING CONTAINS INFORMATION THAT IS PROPRIETARY TO MOLEX ELECTRONIC TECHNOLOGIES, LLC AND SHOULD NOT BE USED WITHOUT WRITTEN PERMISSION

DIMENSION UNITS: mm
SCALE: 2:1
MEASUREMENTS WITHOUT TOLERANCE ACC. TO: ISO 2768-m

REV.	CH.-NO.
2	24410
1	

CURRENT REVISION
DRWN: DRAWN BY mteubel 18-12-2023
APPR: APPR BY msteinbrueck 21-12-2023

INITIAL REVISION
DRWN: DRAWN BY ADenzinger 16-06-2008
APPR: APPR BY Markus.Jobst 08-09-2009

molex

FCT D-Sub Mixed-Layout Connector

PRODUCT CUSTOMER DRAWING

MATERIAL NUMBER: 1731071018
REVISION: 2

REPLACEMENT FOR: 1731071018_Rev.A1
FRIST ANGLE PROJECTION
DRAWING: A3-SIZE
DOCUMENT NUMBER: FM3W3P-1623
CUSTOMER: GENERAL MARKET
SHEET NUMBER: 1 OF 1

COMMENT:
ALL RIGHTS ARE RESERVED BY US FOR THIS DRAWING, WITHOUT OUR PRIOR CONSENT,
IT MAY NEITHER BE DUBLICATED NOR MADE AVAILABLE TO A THIRD PARTY,
AND IT ALSO MAY NOT BE IMPROPERLY USED BY TE RECEIVER, OR A THIRD PARTY.