Jul.1.2024 Copyright 2024 HIROSE ELECTRIC CO., LTD. All Rights Reserved.
In case of consideration for using Automotive equipment / device which demand high reliability, kindly contact our sales window correspondents.

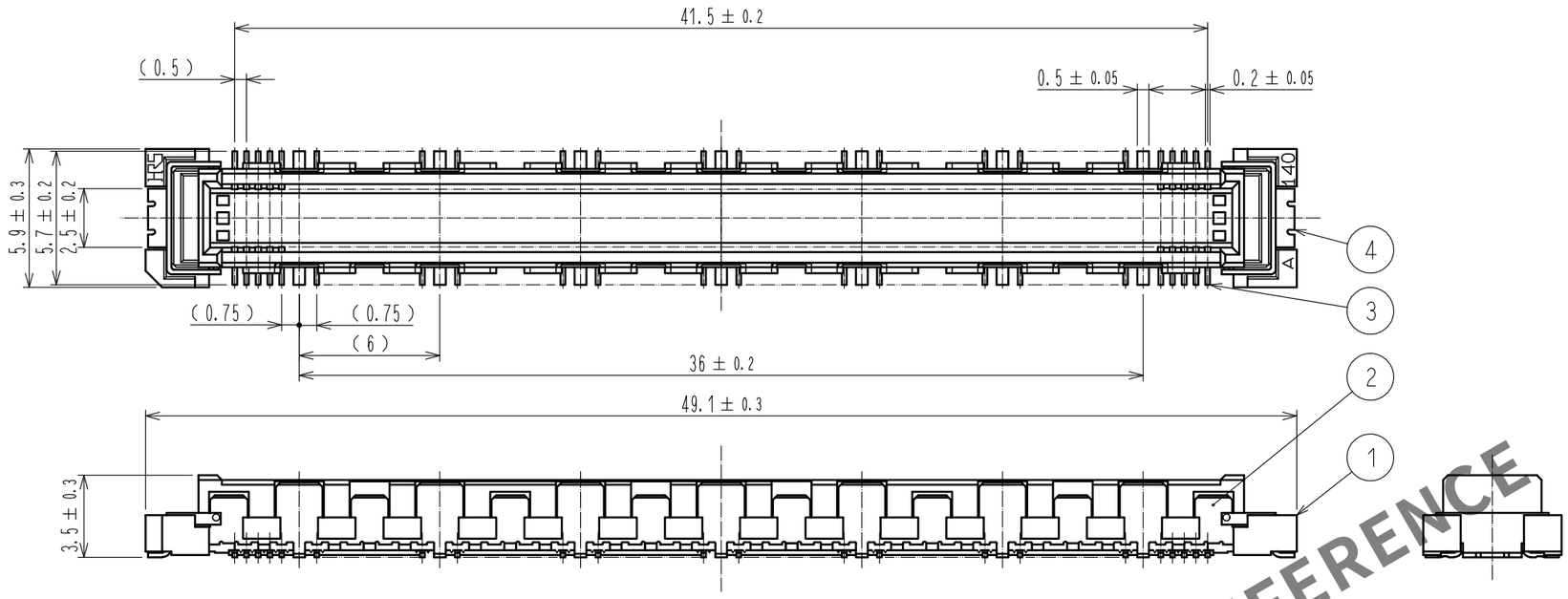


RECOMMENDED LAND PATTERN DIMENSION OF PCB
(RECOMMENDED METAL MASK THICKNESS : 0.15mm)

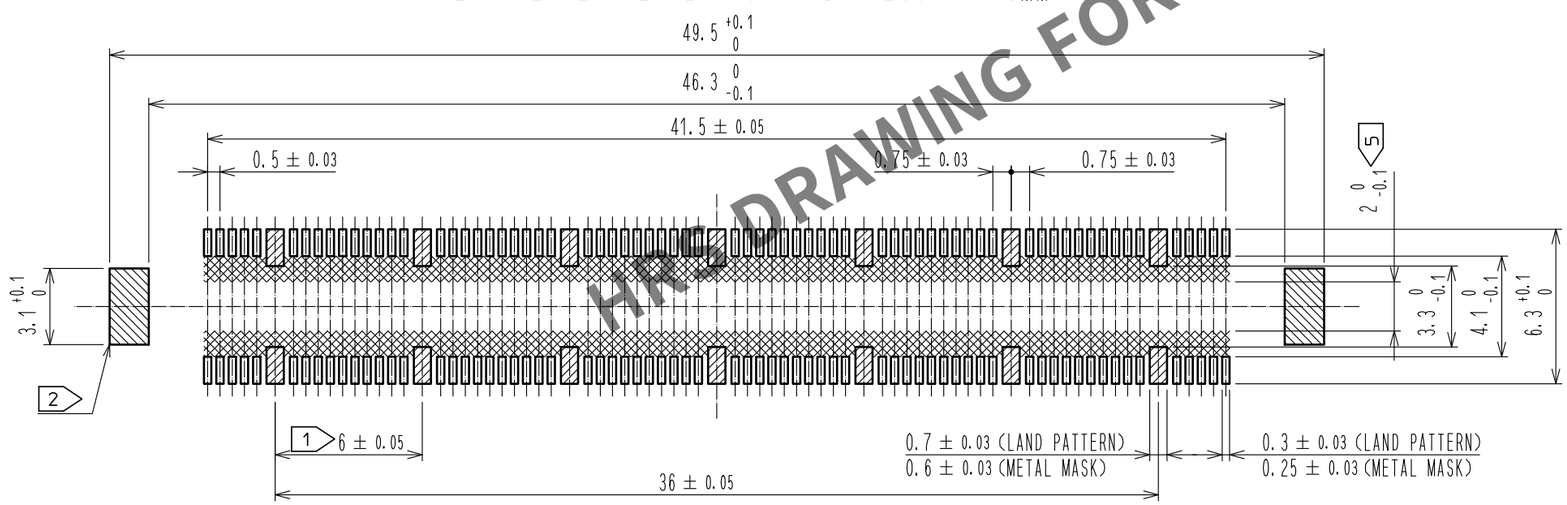


CROSS CUT SECTION - SIGNAL(5:1)

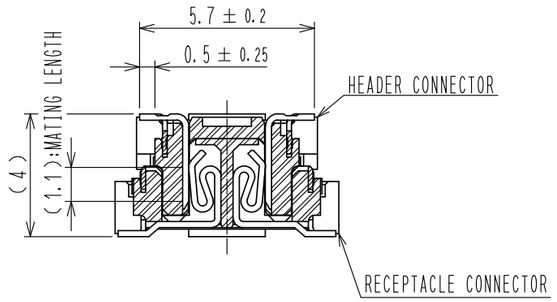


CROSS CUT SECTION - GROUND(5:1)

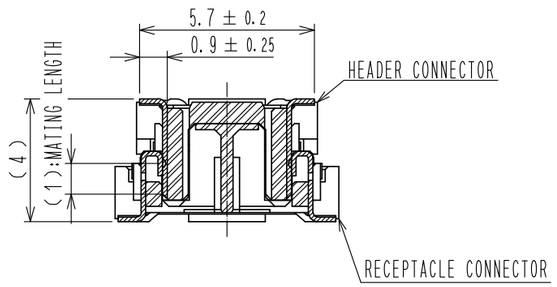


HRS DRAWING FOR REFERENCE

NOTES
1. 14 HATCHED PARTS : GROUND CIRCUIT.
2. 2 HATCHED PARTS : GROUND CIRCUIT.
3. SMT LEAD-COPLANARITY : 0.1 MAX.
4. THIS PRODUCT HAS NO POLARITY TO PATTERN FOR MOUNTING.
5. MAKE SURE WIDTH OF PATTERN IS WITHIN THAT OF LAND, OR LEAD MAY TOUCH PATTERN. (THIS APPLIES TO HATCHED AREA.)
6. EMBOSS CARRIER TAPE PACKAGE IS APPLIED ON THIS PRODUCT. PLEASE REFER TO THE SHEET 2/2 FOR THE DETAILS.
7. THE DIMENSIONS IN PARENTHESES ARE FOR REFERENCE.

| NO. | MATERIAL | FINISH , REMARKS | NO. | MATERIAL | FINISH , REMARKS |
|---|---|---|---|---|---|
| 4 | PHOSPHOR BRONZE | TIN-PLATING | | | |
| 3 | PHOSPHOR BRONZE | CONTACT AREA :GOLD 0.1μm min.<br>LEAD AREA :TIN-PLATING 1μm min.<br>UNDER PLATING:NICKL 1μm min. | | | |
| 2 | PHOSPHOR BRONZE | TIN-PLATING | 6 | POLYESTER | TOP COVER TAPE |
| 1 | LCP | BEIGE | 5 | POLYSTYRENE | EMBOSSED CARRIER TAPE |

| UNITS | SCALE | COUNT | DESCRIPTION OF REVISIONS | DESIGNED | CHECKED | DATE |
|---|---|---|---|---|---|---|
| mm | 4 : 1 | 1 | DIS-F-00015123 | SY. KUDO | HT. YAMAGUCHI | 20220831 |

HIROSE ELECTRIC CO., LTD.

| | | | | |
|---|---|---|---|---|
| APPROVED | : HT. YAMAGUCHI | 20100729 | DRAWING NO. | EDC-151951-91-21 |
| CHECKED | : HT. YAMAGUCHI | 20100729 | PART NO. | FX10B-140P/14-SV(91) |
| DESIGNED | : SY. KAMIGA | 20100729 | CODE NO. | CL0570-0024-0-91 |
| DRAWN | : HK. SUNADORI | 20100728 | | 1/2 |

FORM HC0011-5-7

Jul.1.2024 Copyright 2024 HIROSE ELECTRIC CO., LTD. All Rights Reserved.
In case of consideration for using Automotive equipment / device which demand high reliability, kindly contact our sales window correspondents.

# DRAWING FOR PACKING(2:1)

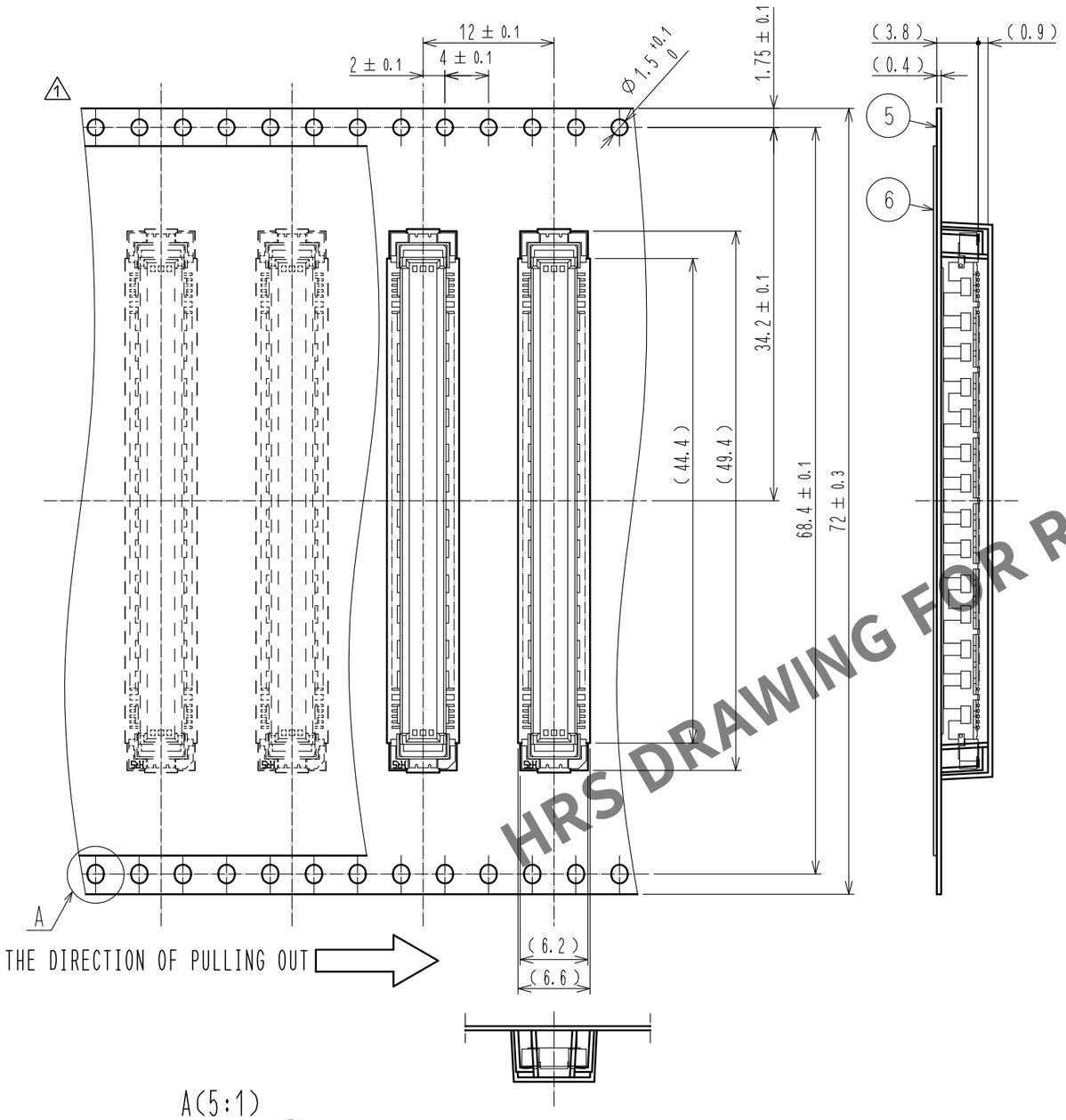


A(5:1)

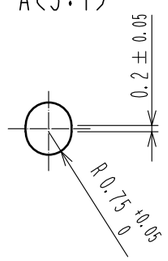


REELED DIMENSION (Free)

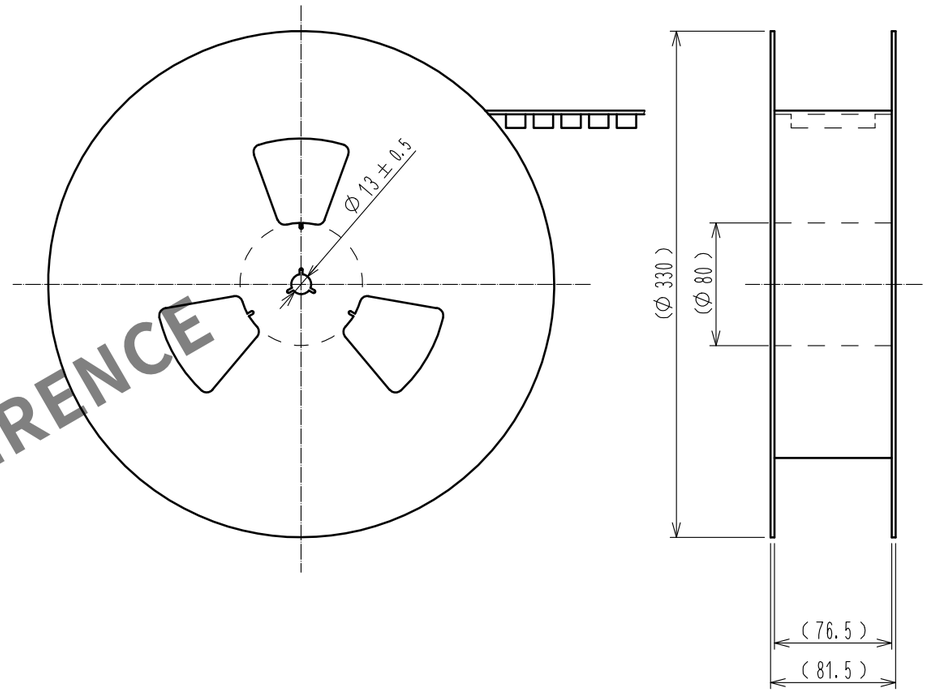


HRS DRAWING FOR REFERENCE

NOTES
8 1REEL : 1000 CONNECTORS.
9 MINIMUM 10 COMPARTMENTS FROM BOTH REEL ENDS REMAIN EMPTY.
10 THIS PRODUCT HAS NO POLAVITY TO TAPE AND REEL PACKAGING.
11 THE DIMENSIONS IN PARENTHESES ARE FOR REFERENCE.

| | | |
|---|---|---|
| HRS | DRAWING NO. | EDC-151951-91-21 |
| | PART NO. | FX10B-140P/14-SV(91) |
| | CODE NO. | CL0570-0024-0-91 |

1 2/2